Self Diagnosis Supported model

SERVICE MANUAL

AE-6D CHASSIS

MODEL	COMMANDER	DEST	CHASSIS NO.
KD-36NX200U	RM-939	UK	SCC-Q84K-A

FD Trinitron

KD-36NX200U

RM-939

TRINITRON ® COLOR TV

SONY®

TABLE OF CONTENTS

Section	Title	Page
	Caution	3
	Specifications	4
	Connectors	5
	Self Diagnostic Software	6
1. GENERAL		
	Automatically Tuning the TV	9
	Using a digital text service	9
	Using a conventional text service	10
	The EPG menu	10
	Using the TV menu system	11
	Viewing memory stick pictures	12
	Remote Control operation of VCR and DVD player	13
	Specifications	14
	Troubleshooting	14
2. DISASSEMBLY		
2-1.	Rear Cover Removal	15
2-2.	Speaker Box Removal	15
2-3.	Chassis Removal and Refitting	15
2-4.	G1 Board Removal	16
2-5.	G Board Removal	16
2-6.	D2 Board Removal	16
2-7.	D1 Board Removal	16
2-8.	Service Position	17
2-9.	Wire Dressing 1	17
2-10.	Wire Dressing 2	17
2-11.	Wire Dressing 3	17
2-12.	Picture Tube Removal	18
	Bottom Plates	19
3. SET-UP ADJUSTMENTS		
3-1.	Beam Landing	20
3-2.	Convergence	21
3-3.	Focus Adjustment	23
3-4.	Screen (G2), White Balance	23
4. CIRCUIT ADJUSTMENTS		
4-1.	Electrical Adjustments	24
4-2.	Volume Electrical Adjustments	28
4-3.	Test Mode 2	29

Section	Title	Page
5. DIAGRAMS		
5-1.	Block Diagrams (1)	31
	Block Diagrams (2)	32
	Block Diagrams (3)	33
	Block Diagrams (4)	34
	Block Diagrams (5)	35
5-2.	Circuit Board Location	35
5-3.	Schematic Diagrams and Printed Wiring Boards	35
	* A Board PWB	36
	* A Board Schematic	39
	* B5 Board PWB	48
	* B5 Board Schematic	49
	* C1 Board PWB	57
	* C1 Board Schematic	58
	* H Board PWB	57
	* H Board Schematic	59
	* MS2 Board PWB	57
	* MS2 Board Schematic	59
	* D1 Board PWB	60
	* D1 Board Schematic	61
	* G1 Board PWB	63
	* G1 Board Schematic	62
	* D2 Board PWB	63
	* D2 Board Schematic	64
	* M2 Board PWB	65
	* M2 Board Schematic	66
	* G Board PWB	68
	* G Board Schematic	67
	* VM Board PWB	68
	* VM Board Schematic	69
	* F3 Board PWB	70
	* F3 Board Schematic	69
	* H3 Board PWB	70
	* H3 Board Schematic	71
	* J3 Board PWB	70
	* J3 Board Schematic	72
5-4.	Semiconductors	74
5-5.	IC Blocks	76
6. EXPLODED VIEWS		
6-1.	Chassis	79
6-2.	Picture Tube	80
7. ELECTRICAL PARTS LIST		81

ATTENTION

APRES AVOIR DECONNECTE LE CAP DE'LANODE, COURT-CIRCUITER L'ANODE DU TUBE CATHODIQUE ET CELUI DE L'ANODE DU CAP AU CHASSIS METALLIQUE DE L'APPAREIL, OU AU COUCHE DE CARBONE PEINTE SUR LE TUBE CATHODIQUE OU AU BLINDAGE DU TUBE CATHODIQUE.

ATTENTION !!

AFIN D'EVITER TOUT RISQUE D'ELECTROCUTION PROVENANT D'UN CHÁSSIS SOUS TENTION, UN TRANSFORMATEUR D'ISOLEMENT DOIT ETRE UTILISÈ LORS DE TOUT DÈPANNAGE LE CHÁSSIS DE CE RÈCEPTEUR EST DIRECTMENT RACCORDÈ Á L'ALIMENTATION SECTEUR.

ATTENTION AUX COMPOSANTS RELATIFS Á LA SECURITÈ!!

LES COMPOSANTS IDENTIFIÈS PAR UNE TRAME ET PAR UNE MARQUE ⚠ SUR LES SCHÈMAS DE PRINCIPE, LES VUES EXPLOSÈES ET LES LISTES DE PIECES SONT D'UNE IMPORTANCE CRITIQUE POUR LA SÈCURITÈ DU FONCTIONNEMENT, NE LES REMPLACER QUE PAR DES COMPSANTS SONY DONT LE NUMÈRO DE PIÈCE EST INDIQUÈ DANS LE PRÈSENT MANUEL OU DANS DES SUPPLÈMENTS PUBLIÈS PAR SONY.

CAUTION

SHORT CIRCUIT THE ANODE OF THE PICTURE TUBE AND THE ANODE CAP TO THE METAL CHASSIS, CRT SHIELD, OR THE CARBON PAINTED ON THE CRT, AFTER REMOVAL OF THE ANODE CAP.

WARNING !!

AN ISOLATION TRANSFORMER SHOULD BE USED DURING ANY SERVICE WORK TO AVOID POSSIBLE SHOCK HAZARD DUE TO LIVE CHASSIS, THE CHASSIS OF THIS RECEIVER IS DIRECTLY CONNECTED TO THE POWER LINE.

SAFETY-RELATED COMPONENT WARNING !!

COMPONENTS IDENTIFIED BY SHADING AND MARKED ⚠ ON THE SCHEMATIC DIAGRAMS, EXPLODED VIEWS AND IN THE PARTS LIST ARE CRITICAL FOR SAFE OPERATION. REPLACE THESE COMPONENTS WITH SONY PARTS WHOSE PART NUMBERS APPEAR AS SHOWN IN THIS MANUAL OR IN SUPPLEMENTS PUBLISHED BY SONY.

CAUTION

Lead Free Soldered Boards

The circuit boards listed below [Table 1] used in these models may have been processed using Lead Free Solder. The boards are identified by the LF logo located close to the board designation e.g. F1, H1 etc [see examples]. The servicing of these boards requires special precautions to be taken as outlined below.

example 1

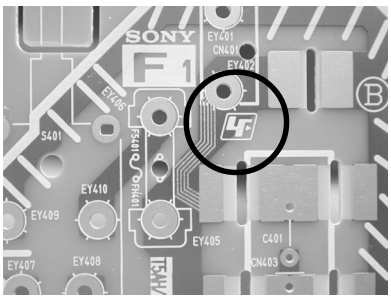

example 2

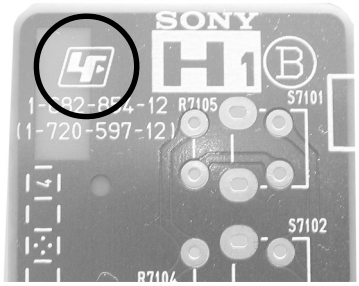

Table 1

Board	Function
H3	Front AV Input, Headphone and Control Switches

It is strongly recommended to use Lead Free Solder material in order to guarantee optimal quality of new solder joints. Lead Free Solder is available under the following part numbers :

Partnumber	Diameter	Remarks
7-640-005-19	0.3mm	0.25Kg
7-640-005-20	0.4mm	0.50Kg
7-640-005-21	0.5mm	0.50Kg
7-640-005-22	0.6mm	0.25Kg
7-640-005-23	0.8mm	1.00Kg
7-640-005-24	1.0mm	1.00Kg
7-640-005-25	1.2mm	1.00Kg
7-640-005-26	1.6mm	1.00Kg

Due to the higher melting point of Lead Free Solder the soldering iron tip temperature needs to be set to 370 degrees centigrade. This requires soldering equipment capable of accurate temperature control coupled with a good heat recovery characteristics.

For more information on the use of Lead Free Solder, please refer to *http://www.sony-training.com*

ITEM MODEL	Television System	Stereo System	Channel Coverage	Color System
U	I, DVB-T	NICAM Stereo	UHF : B21-B69	PAL, NTSC3.58, NTSC4.43 (VIDEO IN) MPEG-2, MP@ML

Picture Tube	FD Trinitron Approx 91 cm (36 inches) (Approx 88 cm picture measured diagonally) 102° degree deflection	**Sound Output**	
		Right and Left speaker	2x20W (Music Power) 2x10W (RMS)
		Subwoofer	1x30W (Music Power) 1x15W (RMS)
Input/Output Terminals [REAR]		**General Specifications**	
1: 21-pin Euro connector (CENELEC standard)	Inputs for Audio and Video signals. Inputs for RGB. Outputs of TV Video and Audio signals.	Power Requirements	220 - 240V
		Power Consumption	182W
2: 21-pin Euro connector	Inputs for Audio and Video signals. Inputs for RGB. Outputs of TV Video and Audio signals.	Dimensions	Approx 1010 x 645 x 607mm
		Weight	Approx 87kg
3: 21-pin Euro connector	Inputs for Audio and Video signals. Inputs for S Video. Outputs for Video and Audio signals (selectable)	Supplied Accessories	RM-939 Remote Commander IEC designated R6 battery (2) RF Loop through cable
Phono Jacks	Output Connectors variable for Audio Signals		
PCMCIA Socket	Conditional Access Module	Other Features	DRC MF, DCF, DNR, HOP, 2000 PageTeletext Memory , Virtual Dolby, BBE
Input/Output Terminals [FRONT]		**Remote control system : Infrared control**	
Headphone jack	stereo mini jack	Power requirements	3V dc 2 batteries IEC designation R6 (size AA)
Audio inputs	phono jacks		
Video inputs	phono jacks		
S Video input	4 pin DIN		

Design and specifications are subject to change without notice.

Model Name Item	KD-36NX200U
PAP	OFF
PIP	OFF
RGB Priority	ON
Woofer Box	ON
Scart 1	ON
Scart 2	ON
Front in (4)	ON
Scart 3	ON
Projector	OFF
Norm B/G	OFF
Norm I	ON
Norm D/K	OFF
Norm AUS	OFF
Norm L	OFF
Norm SAT	OFF
Norm M	OFF
Teletext	ON
Nicam Stereo	ON

WARNING (UK Models only)

The flexible mains lead is supplied connected to a **B.S. 1363** fused plug having a fuse of **13 AMP** rating. Should the fuse need to be replaced, use a **13 AMP FUSE** approved by ASTA to **BS 1362**, ie one that carries the ASTA mark.

IF THE PLUG SUPPLIED WITH THIS APPLIANCE IS NOT SUITABLE FOR THE OUTLET SOCKETS IN YOUR HOME, IT SHOULD BE CUT OFF AND AN APPROPRIATE PLUG FITTED. THE PLUG SEVERED FROM THE MAINS LEAD MUST BE DESTROYED AS A PLUG WITH BARED WIRES IS DANGEROUS IF ENGAGED IN A LIVE SOCKET.

When an alternative type of plug is used, it should be fitted with a **13 AMP FUSE**, otherwise the circuit should be protected by a **13 AMP FUSE** at the distribution board.

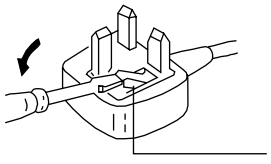

How to replace the fuse.
Open the fuse compartment with a screwdriver blade and replace the fuse.

21 pin connector

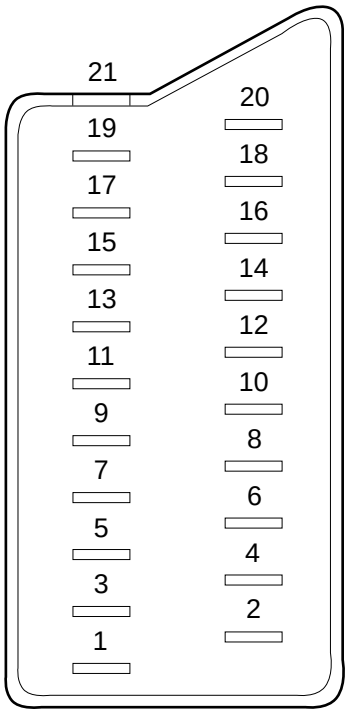

Pin No	1	2	3	Signal	Signal level
1	○	○	○	Audio output B (right)	Standard level : 0.5V rms Output impedence : Less than 1kohm*
2	○	○	○	Audio input B (right)	Standard level : 0.5V rms Output impedence : More than 10kohm*
3	○	○	○	Audio output A (left)	Standard level : 0.5V rms Output impedence : Less than 1kohm*
4	○	○	○	Ground (audio)	
5	○	○	○	Ground (blue)	
6	○	○	○	Audio input A (left)	Standard level : 0.5V rms Output impedence : More than 10kohm*
7	○	●	●	Blue input	0.7 +/- 3dB, 75 ohms positive
8	○	○	○	Function select (AV control)	High state (9.5-12V) : Part mode Low state (0-2V) : TV mode Input impedence : More than 10K ohms Input capacitance : Less than 2nF
9	○	○	○	Ground (green)	
10	○	○	○	Open	
11	○	●	●	Green	Green signal : 0.7 +/- 3dB, 75 ohms, positive
12	○	○	○	Open	
13	○	○	○	Ground (red)	
14	○	○	○	Ground (blanking)	
15	○	–	–	Red input	0.7 +/- 3dB, 75 ohms, positive
	–	○	○	(S signal Chroma input)	0.3 +/- 3dB, 75 ohms, positive
16	○	●	●	Blanking input (Ys signal)	High state (1-3V) Low state (0-0.4V) Input impedence : 75 ohms
17	○	○	○	Ground (video output)	
18	○	○	○	Ground (video input)	
19	○	○	○	Video output	1V +/- 3dB, 75ohms, positive sync 0.3V (-3+10dB)
20	○	–	–	Video input	1V +/- 3dB, 75ohms, positive sync 0.3V (-3+10dB)
	–	○	○	Video input Y (S signal)	1V +/- 3dB, 75ohms, positive sync 0.3V (-3+10dB)
21	○	○	○	Common ground (plug, shield)	

○ Connected ● Not Connected (open) * at 20Hz - 20kHz

Rear Connection Panel

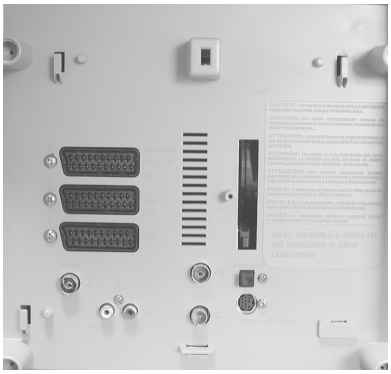

Front Connection Panel

S-Video socket

S Video socket pin configuration		
Pin No	**Signal**	**Signal Level**
1	Ground	-
2	Ground	-
3	Y (S signal) input	1V+/- 3dB 75ohm, positive Sync. 0.3V -3 +10dB
4	C (S signal) input	0.3V+/- 3dB 75ohm, positive Sync.

AE-6D SELF DIAGNOSTIC SOFTWARE

The identification of errors within the AE-6D chassis is triggered in one of two ways :- 1: Busy or 2: Device failure to respond to IIC. In the event of one of these situations arising the software will first try to release the bus if busy (Failure to do so will report with a continuous flashing LED) and then communicate with each device in turn to establish if a device is faulty. If a device is found to be faulty the relevant device number will be displayed through the LED (Series of flashes which must be counted) See table 1., non fatal errors are reported using this method.

Diagnostic Item Description	No of times Standby LED Flashes	Probable cause Location	Detected Symptoms
Power does not turn on	Does not light	Power cord is not plugged in. Fuse is open circuit.	Power does not come on No power is supplied to the TV AC power supply is faulty
+B Overcurrent (OCP)	2 times	H.OUT (Q8102/8103) is shorted. (D1 Board) Linearity FET (Q8106) is shorted. (D1 Board) IC8801 Power IC is shorted. (D1 Board)	Power does not come on Load on power line has shorted
Vertical Deflection stopped	4 times	+15V is not supplied R8207 open (D1 Board) -15V is not supplied R8206 open (D1 Board) IC1701 is shorted (A Board)	Vertical deflection pulse has stopped Power line has shorted

Error Message	LED Code
Reserved	01
OCP (Over Current Protection)	02
OVP (Over Voltage Protection)	03
Vertical Protection	04
Unstable AKB(check starts after 30s,disabled in Production Mode)	05
Horizontal Protection	06
Speaker Protection	07
I2C Bus Error	08
M2-B. ST24C32,NVM	09
A-Board	10
B5 Board	11
J2 Board	12
H Board	13
MS Board	14
B5-B. Main Colour Decoder	15
A-B. CXA2150Q, Backend	16
A-B. MSP3411, Sound Proc.	17
N-B. EMMA Error, Digital Micro.	18
Not used	19-32

Flash Timing Example : e.g. error number 3

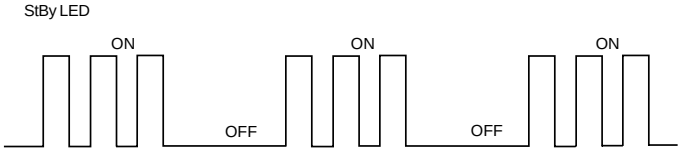

Error Detection Monitor

Device acknowledge is used to check IIC errors. Device acknowledge is checked by sending an IIC start sequence during CRT power on. Each device is checked three times, if there is no acknowledge after each attempt, it will be regarded as an error.
There are three steps to check for errors.

1. IIC line 0
   If all devices except the NVM have errors, IIC line 0 error is displayed.
2. Board check
   If all devices mounted on one board have errors, board error is displayed.
3. Each device check
   If IIC line error and board error are not detected then the device with the error is displayed.

The detected errors can be displayed as follows :

1. Error Monitor Menu.
2. Error Reader.

1. Error Monitor Menu

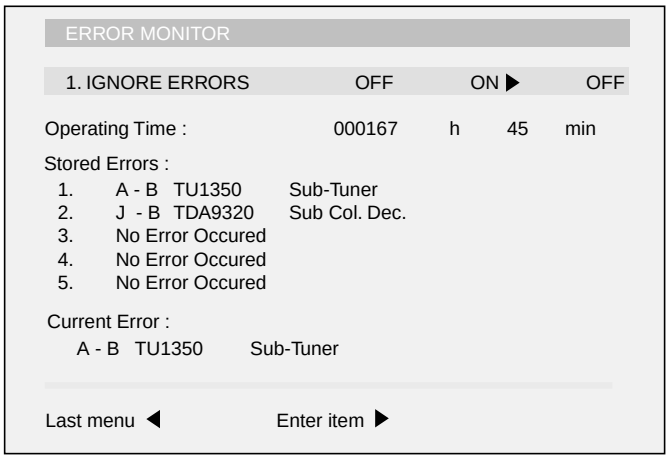

2. Error Reader Display

The error reader display is connected to the service connector to read actual error codes. The part number for the error reader display is S-188-900-10. Once an error has been detected it will then be displayed on the two digit error reader. The errors displayed refer to the following table.

Error Code	Error Message
000h	No Error Occured
001h	Bus Error, I2C0
002h	Bus Error, I2C1
003h	Bus Error, I2C2
100h	A-Board
101h	A-B. CXA1875, Port Exp.
102h	A-B. TU60xx, Main-Tuner
103h	A-B. TDA9886, Main IF
104h	A-B. CXA2150Q, Backend
105h	A-B. MB88141, DAC
106h	A-B. MSP3411G, Sound Proc.
107h	A-B. CXA8070, Dyna. Conv.
200h	B5-Board
201h	B5-B. Main Colour Decoder
202h	B5-B. Sub Colour Decoder
203h	B5-B. MIDX
204h	B5-B. Panorama Gate Array
205h	B5-B. Dig. Noise Reduction
300h	H-Board
301h	H-B. CXD2088, AVLink
400h	J-Board
401h	J2-B. CXA1855, AV Switch
402h	J2-B. CXA2149, AV Switch
403h	J2-B. TU60xx, Sub-Tuner
404h	J2-B. TDA9886, Sub IF
500h	M2-Board
501h	M2-B. ST24C32, NVM
600h	MS1-Board
601h	MS1-B. Memory Stick
900h	N-Board
901h	N-B. EMMA

The operating instructions mentioned here are partial abstracts from the 'Operating Instruction Manual'. The page numbers of the 'Operating Instruction Manual' remain as in the manual.

5 Automatically tuning the TV

1. When you switch on the TV for the first time, the Sony logo appears on the TV screen followed by the 'Memory Stick' logo, then the Language/Country menu with the word 'English' highlighted. Press the ↑ or ↓ buttons on the remote control to highlight your required language. Press the **OK** button to confirm your choice. From now on all menus appear in your chosen language.

2. The word Country is now highlighted. Press the ↑ or ↓ buttons to highlight the country in which you are using the TV. Press the **OK** button to confirm your choice.

   Note: The digital features of this set are designed for use in Great Britain only.

   The picture rotation prompt appears. Sometimes the Earth's natural magnetism can cause the screen to look tilted.
   a) If no correction is required, press the ← button.
   b) If some correction is required, press the **OK** button. Press the ↑ or ↓ button to rotate the picture over a range of -5 to +5. Press the **OK** button to store.

   The autotune prompt screen appears. Press the **OK** button to select Yes and begin the digital autotune procedure.

   When all the available digital programmes are found, the analogue tuning display appears and all the analogue signals are captured and stored.

   If no digital and no analogue signals are found, a display appears on screen asking you to confirm your aerial is connected. Check your aerial is connected then press the **OK** button to repeat the tuning procedure.

   Once all signals have been captured and stored, the TV returns to normal operation and displays the digital programme captured on programme number 1.

   Note: If no digital signals are captured, then the analogue programme stored on programme number 1 is displayed.

3. To view programmes, press the **PROG+/-** button or the numbered buttons on the remote control.

Using a digital text service

Most digital TV channels broadcast information via their text service. This digital service includes high quality text and graphics along with advanced navigation options. Additionally, this TV has access to dedicated text channels transmitted by the broadcasting authorities. The appearance, content and navigation methods of all digital text services are decided by the broadcaster. For example, the BBC's digital text service may look different to ITV's digital text. However, the digital text services currently available use simple navigation methods based on the following buttons:

The text button ☰ to load up the digital text,
The ↑, ↓, ← and → buttons (to move around the screen),
The **OK** button or the numbered buttons (to select items on screen),
The four coloured buttons (to access shortcuts).

Selecting a dedicated digital text channel

1. Press the i+ button on the remote control to check if you are in digital mode. If you are watching a digital programme an Info display appears on screen providing brief details for the current and next programme. If the display does not appear, press the **DIGITAL**/▢ button to switch to digital mode.

2. Press the i+ button to remove the Info display from the TV screen then select the programme number that is broadcasting the dedicated digital text channel by using the numbered buttons on the remote control. If you do not know the channel number of a dedicated digital text channel, you can use the 'Channel Index menu' to find one. (Please refer to the 'Channel index menu' section of this manual.)

3. Once the text page is displayed, follow the on-screen instructions to obtain your required selection.

   Note: On some pages the TV programme may also be displayed on the text screen. On-screen instructions will inform you how to change the displayed programme.

4. If you are instructed to press 'OK' or 'Select' when viewing the text pages, press the **OK** button.

5. When you have finished viewing the text service, press the ☰ button to exit.

Selecting a text service from other digital channels

Normal text services may also be available on other digital channels. This is sometimes indicated by a small symbol on your TV screen, superimposed on the programme you are watching.

1. Press the ↑, ↓, ←, or → buttons to select the symbol, then press the **OK** button to display the chosen information.

2. Alternatively, you may be instructed to use the numbered or coloured buttons on your remote control to display the various pages of text information. If you are instructed to press 'OK' or 'Select' when viewing the text pages, press the **OK** button.

3. Once the text information is displayed, you can access required information by using the ↑, ↓, ←, or → buttons, the coloured buttons and/or the numbered buttons on the remote control.

4. When you have finished viewing the text service, press the ☰ button to exit.

Using a conventional text service

Most analogue TV channels broadcast a text service. The index page (usually page 100) provides information on how to use the service. Please ensure you are receiving a strong signal or some text errors may occur.

Switching on the text service

1. Press the button on the remote control to check if you are in analogue mode. If you are watching a digital programme an Info display appears on screen providing brief details for the current and next programme. To change to analogue programmes press the **DIGITAL/** button.
2. Select the TV channel that carries the text service you wish to view
3. Press the button to enter Picture and Text (P&T) mode. The screen is divided into two with the Text display on the left and the TV channel in the right corner.

   Press the button a second time to enter full screen Text mode.

   Press the button a third time to enter Mix mode.
4. Press the numbered buttons to enter a three digit number for the text page you wish to view. Your selected page appears on screen.
5. Enter more 3 digit page numbers as required.
6. When you have finished viewing the text service, press the **DIGITAL/** button to remove the text display from the screen.

How to use the text features

Text Features	How to select
To select the next or preceding page	Press the or button.
To select a sub page	A text page can consist of several sub pages. In this case an information box is displayed at the bottom of the screen showing the number of sub pages available. Select the sub pages by pressing the ↑ or ↓ button.
To keep a page on display	Press the button. Press again to cancel.
To use Fastext	Fastext allows you to access pages with one button push. When Fastext is available, four coloured items appear at the bottom of the screen. Press the corresponding coloured button on the remote control to display the page.
To use the Page Catching feature	Select a page that contains several page numbers (e.g. the index page), then press the **OK** button. Press the ↑ or ↓ button to highlight the page number required, then press the **OK** button again. Your selected page appears on screen.

The EPG menu

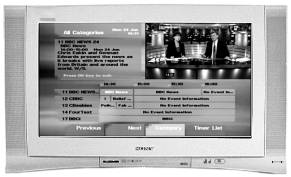

The EPG menu (Electronic Programme Guide) provides a quick and easy way to:-

a) View a complete list of the programmes available.
b) Obtain a preview of the programmes currently being broadcast.
c) Create a list relating to a category of programme, e.g. Sports or Movies.
d) Record programmes.

1. The EPG menu is only available when watching digital channels. To check if you are in digital mode, press the button on the remote control. An Info display appears on screen providing brief details for the current and next programme. If the display does not appear, press the **DIGITAL/** button.
2. Press the button to remove the Info display from the screen then press the button to display the EPG menu screen. This screen consists of an information window, a preview window, a 2 hour timer bar (divided into 30 minute intervals) and a 5 channel programme list covering the 2 hour period.
3. Press the ↑ or ↓ buttons to move the cursor bar up or down the programme list and the → or ← buttons to move left and right. If you press the → button once more after highlighting the last programme on the right, the programmes scheduled for the next 2 hour period are displayed. As each programme is highlighted, a brief description of the programme appears in the event information box at the top left of the screen. If you do not wish to select a programme from the 5 channels listed, press the **GREEN** button to display the next 5 channels or **RED** button to display the previous 5 channels.
4. If a programme you highlight is currently being broadcast, you will be prompted to press the **OK** button to obtain a preview.

   *Note:If an age limit for viewing has been set and the programme selected exceeds that age limit, you will need to enter your PIN code before the preview is displayed. Refer to 'The Main menu' for more information on the 'PIN Code' feature. Programmes that exceed the age limit you have set will be identified by a symbol.
5. When the programme in the preview screen is the one you want, press the **OK** button to exit the EPG menu and view the programme at full size.

The Category pop-up list

The Category pop-up list allows you to search for programmes quickly by dividing the channels into different categories. For example, if you select 'News' from the Category pop-up list, then only programmes related to News will be shown in the EPG menu.

1. With the EPG menu on screen, press the **YELLOW** button to display the Category pop-up list.
2. Press the ↑ or ↓ buttons to highlight the category you want, then press the **OK** button. The EPG programme list will now only contain programmes of the type selected.

   For information on the category types as well as instructions on how to add and remove programmes from the Favourite list, please refer to 'The Channel Index menu' section on the previous page.

The following pages explains the TV set up menus and their operation. Although most of these menus can be accessed whilst watching digital programmes, we recommend you view them in analogue mode. To check which mode you are in, press the i+ button on the remote control. If you are watching a digital programme, an Info display appears on screen providing brief details for the current and next programme. If this happens, press the **DIGITAL/** button on the remote control to switch to analogue channels.

Using the TV menu system

This TV contains a menu system which is based on a series of on screen displays. These displays help you get the most from your TV, from customising the picture and sound to accessing advanced features. Use the following buttons on the remote control to operate the TV menu system.

1. Press the **MENU** button to display the main menu.
2. Use the following buttons to operate the menu:

   - Press the ↓ or ↑ buttons to highlight the required menu or option.
   - Press the → button to enter the required menu or option.
   - Press the ← button to return to the last menu or option.
   - Press the ↓, ↑, ← or → buttons to alter the settings of the selected option.
   - Press the **OK** button to confirm and store your selection.
3. Press the **MENU** button to remove the menu from the TV screen.

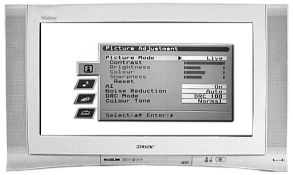

Picture Adjustment menu

This menu allows you to customise the picture. Highlight the required option and press → to select. The table below explains each option and how to use it.

Option	How to use
Picture Mode This option allows you to select one of four picture modes. Live, Movie and Game modes are preset and only Contrast can be adjusted. The Personal mode, however, also allows you to adjust the Brightness, Colour and Sharpness options.	Press ↑ or ↓ to select Live, Personal, Movie or Game. Press **OK** to confirm.
Contrast, Brightness, Colour, Sharpness These options allow you to adjust the contrast, brightness, colour and sharpness. **Note:**Brightness, Colour and Sharpness can only be adjusted when Picture Mode is set to Personal.	Press ← or → to set the levels. Press **OK** to confirm.
Reset This option resets all picture settings to the factory preset levels.	Press → to restore default picture settings.
AI (Artificial Intelligence) This option monitors the picture and limits any sudden increases in Brightness and Contrast.	Press ↑ or ↓ to select On or Off. Press **OK** to confirm.
Noise Reduction Sometimes a weak signal can produce a snowy picture (called Picture Noise). This option can help to reduce this effect.	Press ↑ or ↓ to select High, Mid, Low, Auto or Off. Press **OK** to confirm.
DRC Mode DRC (Digital Reality Creation) Mode allows you to enjoy higher quality pictures. The settings available are: **Off**:Basic 100Hz picture quality. **DRC 50**:Improved picture resolution. DRC 100:Optimum picture resolution	Press ↑ or ↓ to select Off, DRC 50 or DRC 100. Press **OK** to confirm.
Colour Tone This option allows you to alter the tint of the picture. The settings available are: **Warm**:Gives the white colours a red tint. **Normal**:Gives the white colours a neutral tint. **Cool**:Gives the white colours a blue tint.	

Manual Set Up menu

This menu gives you access to more advanced features. The options are:

Language/Country
When you first installed the TV you were asked to select your language and country. The 'Language/Country' option in the 'Manual Set Up' menu allows you to change these settings. With the 'Language/Country' option highlighted, press → to enter the 'Language/Country' menu. Press ↓ or ↑ to select 'Language' or 'Country'. Press → to select. Press ↓ or ↑ to highlight the required setting. Press **OK** to confirm.

Manual Programme Preset
With the 'Manual Programme Preset' option highlighted, press → to enter the 'Manual Programme Preset' menu. The 'Manual Programme Preset' menu is explained on the following page.

Further Programme Preset
With the 'Further Programme Preset' option highlighted, press → to enter the 'Further Programme Preset' menu. The 'Further Programme Preset' menu is explained on page 28.

RGB Set Up
When viewing signals from RGB equipment connected to the AV1 or AV2 sockets (e.g. DVD player, PlayStation) the picture may need adjusting. The 'RGB Set Up' option in the 'Manual Set Up' menu allows you to adjust the size and horizontal picture position of signals from RGB equipment. With the 'RGB Set Up' option highlighted, press → to enter the 'RGB Set Up' menu. Press → to select H Centre. Press ↓ or ↑ to centralise the picture over a range of -10 to +10. Press **OK** to store. Press ↓ to select H Size. Press ↓ or ↑ to adjust the picture size over a range of -10 to +10. Press **OK** to store.

Note: If there is no RGB equipment connected to either the AV1 or AV2 scart sockets the 'RGB Set Up' option will not be available.

Picture Rotation
Due to the Earth's natural magnetism the picture might slant slightly. The 'Picture Rotation' option in the 'Manual Set Up' menu allows you to cancel out this effect. With the 'Picture Rotation' option highlighted, press → to select. Press ↓ or ↑ to rotate the picture over a range of -5 to +5. Press **OK** to store.

Personal ID
The 'Personal ID' option in the 'Manual Set Up' menu allows you to enter a code which could help to trace you should the TV be stolen and recovered. This code can only be entered once - please make a note of it and keep it safe. With the 'Personal ID' option highlighted, press → to select. Press ↓ or ↑ to display the first character of the code you wish to use. Press → to select. Repeat until all characters have been entered. Press **OK** to store. A confirmation screen is displayed. Press **OK** to confirm.

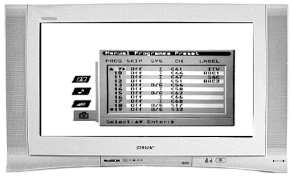

Manual Programme Preset menu (for analogue channels only)

To check which mode you are in, press the i+ button on the remote control. If you are watching a digital programme, an Info display appears on screen providing brief details for the current and next programme. If this happens, press the **DIGITAL/** button on the remote control to switch to analogue channels.

The 'Manual Programme Preset' option in the 'Manual Set Up' menu allows you to manually tune in channels. With the 'Manual Programme Preset' option highlighted, press → to enter the 'Manual Programme Preset' menu. Press ↓ or ↑ to highlight the channel you wish to tune. Press → twice to select the SYS column. Press ↓ or ↑ to select the TV broadcast system (Choose I for TV broadcasts or EXT for an external input source). Press → to confirm and select the CH column. Press ↓ or ↑ to select the channel tuning (C for terrestrial channels, S for cable channels or F for direct frequency input). Press → to confirm. You now need to tune the channel by one of the following methods:

(a) If you know the channel number of the TV broadcast, the VCR test signal or the frequency:
Press the **numbered** buttons on the remote control to enter the channel number.
Press **OK** to store.

(b) If you do not know the channel number:
Press ↓ to select SEARCH. The TV set automatically searches for the next available TV broadcast channel or the VCR test signal. When a channel has been found press either **OK** to store or ↓ to continue searching.

(c) For external input sources (EXT):
Press ↓ to select AV1, AV2, AV3, or AV4 depending on which socket you have connected your equipment to. Press **OK** to store.

Naming a channel
Names for channels are usually taken automatically from Teletext (if available). This name is displayed briefly on screen when the channel is selected. The 'LABEL' option in the 'Manual Programme Preset' menu allows you to assign a name of your choice up to 5 characters or numbers. With the 'Manual Programme Preset' option highlighted, press → to enter the 'Manual Programme Preset' menu. Press ↓ or ↑ to highlight the channel number you require. Press → repeatedly to select the LABEL column. Press ↓ or ↑ to select the first character. Press → to confirm this character. Select the other characters in the same way. After selecting all required characters, press **OK** to store.

Skipping a channel
The 'SKIP' option in the 'Manual Programme Preset' menu allows you to skip unused channel positions when selecting channels with the **PROG+/-** buttons. However, you can still select skipped channels by using the **numbered** buttons on the remote control. With the 'Manual Programme Preset' option highlighted, press → to enter the 'Manual Programme Preset' menu. Press ↓ or ↑ to highlight the channel number you require. Press → to select the SKIP column. Press ↓ to select On (select Off to remove the SKIP feature). Press **OK** to store.

Viewing Memory Stick pictures

A 'Memory Stick'* is a new recording medium with a data capacity that exceeds a floppy disk. It is specially designed for exchanging and sharing digital data among 'Memory Stick' compatible products. Use 'Memory Stick' to display JPEG pictures (DCF version 1.0 format)** individually or as a slideshow presentation on the TV screen. Because it is removable, 'Memory Stick' can also be used for external data storage.

Inserting a 'Memory Stick'

Insert a memory stick into the front control panel of the TV set until it clicks into the connector. The ▲ symbol must be facing forwards. The red light flashes indicating that the memory stick contents are being read.

Removing a 'Memory Stick'

Confirm that the red light is off. **Do not pull** the memory stick. You must push the memory stick and then release. The memory stick will spring out.

Note:
* Data stored on a 'Memory Stick' may become damaged or erased if you remove the 'Memory Stick' when it is reading or writing data.

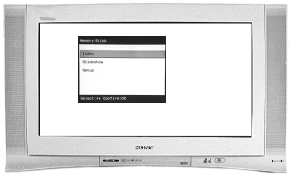

The 'Memory Stick' menu

The 'Memory Stick' menu is displayed automatically when you insert the memory stick into your TV set. Alternatively, if there is a memory stick already inserted, press the **MEMORY STICK** button on the remote control to display the menu screen. There are 3 options available, namely 'Index', 'Slideshow' and 'Setup'.

Notes:
* Memory Stick' and the logo are trademarks of Sony Corporation.
** DCF (Design rules for Camera File systems) is a standard file name format for digital still cameras, DV camcorders etc. It is supported by SONY and other manufacturers.

Index

This feature enables you to view on screen the JPEG DCF format pictures from your memory stick.

1. Press the **MEMORY STICK** button on the remote control to display the 'Memory Stick' menu on the TV screen.
2. Press the ↑ or ↓ button to highlight 'Index' then press the **OK** button to display the 'Memory Stick Index' screen.
3. Press the ↓, ↑, ← or → buttons to highlight the required picture, then press the **OK** button to display the picture fully on the TV screen.

   Note: Only a limited number of pictures can be displayed on the Index screen at one time. If your required picture is not visible, highlight 'Page +' then press the **OK** button to view the next set of pictures. Press the ↓, ↑, ← or → buttons to select your desired picture then press the **OK** button to view.
4. Use the ↓, ↑, ← or → buttons to highlight 'Back'. Press the **OK** button to return to the 'Memory Stick' menu or press the **DIGITAL/**▭ button at any time to return to normal TV operation.

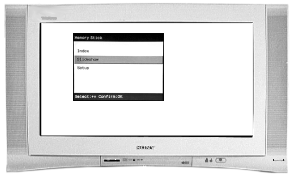

Slideshow

This feature allows you to display all the memory stick pictures as a slideshow presentation on the TV screen.

1. Press the **MEMORY STICK** button on your remote control to display the 'Memory Stick' menu on the TV screen.
2. Press the ↑ or ↓ button to highlight Slideshow.
3. Press the **OK** button to start the slideshow. (To change the length of time an image is displayed refer to the 'Setup' section on the following page.)
4. Press the **OK** button during the slideshow to return to the 'Memory Stick' menu. Press the **DIGITAL/**▭ button to return to normal TV operation.

Remote control operation for VCR and DVD players

This remote control has been configured to operate not only Sony DVDs and VCRs but also those made by other manufacturers. To operate other makes of DVD and VCR using this remote control, complete the following procedure:

1. Find the 3 digit code for your brand from the list below. If your brand has more than one code allocated to it, make a note of the first code only at this stage.
2. Press the **MODE** button on the remote control until either the VCR green light or the DVD green light is illuminated.
3. With the required green light illuminated, press and hold down the **YELLOW** button for approximately 6 seconds, until the light starts to flash.
4. Using the **numbered** buttons, enter the 3 digit code for your DVD or VCR. Once a correct number has been entered, all three green lights will illuminate momentarily.
5. Turn on your DVD or VCR and check that the remote control operates the main functions. If not, repeat steps 2 - 4 and enter the next 3 digit code allocated to your brand of VCR or DVD.
6. When you wish to use the remote control to operate the TV again, press the **MODE** button until the TV green light illuminates. Don't forget to select VCR or DVD using the **MODE** button every time you wish to operate that equipment with this remote control.

Note: The brand codes you set may be lost if weak batteries are not replaced immediately. Should this happen, use the above procedure to reset the code. A small label has been attached to the inside of the battery cover for you to make a note of your brand codes.
Not all brands and models of DVDs or VCRs are covered in this list. However, Sony will endeavour to update the software periodically, so please refer to the code table provided with your remote control.

VCR Brand List		DVD Brand List	
Brand	Code	Brand	Code
SONY (VHS)	301, 302, 303, 309	SONY	001
SONY (BETA)	301, 302, 303, 309	AIWA	021
SONY (DVD)	304, 305, 306	DENON	018, 027, 020, 002
AIWA	325, 331, 351	GRUNDIG	009, 028, 023, 024, 016. 003
AKAI	326, 329, 330	HITACHI	025, 026, 015, 004
DAEWOO	342, 343	JVC	006, 017
GRUNDIG	358, 355, 360, 361, 320, 351	KENWOOD	008
HITACHI	327, 333, 334	LG	015, 014
JVC	314, 315, 322, 344, 352, 353,	LOEWE	009, 028, 023, 024, 016. 003
LG	332, 338	MATSUI	013, 016
LOEWE	358, 355, 360, 361, 320, 351	ONKYO	022
MATSUI	356, 357	PANASONIC	018, 027, 020, 002
ORION	328	PHILIPS	009, 028, 023, 024, 016. 003
PANASONIC	321, 323	PIONEER	004
PHILIPS	311, 312, 313, 316, 317, 318,	SAMSUNG	011, 014
SAMSUNG	339, 340, 341, 345	SANYO	007
SANYO	335, 336	SHARP	019, 027
SHARP	324	THOMSON	012
THOMSON	319, 350	TOSHIBA	003
TOSHIBA	337	YAMAHA	018, 027, 020, 002

Specifications

TV System	I/DVB-T	
Colour System	PAL NTSC 3.58, 4.43 (only Video In) MPEG-2 MP@ML	
Channel Coverage	UHF:	B21 - B69
Picture Tube	KV-32NX200 KV-36NX200	FD Trinitron Approx. 82cm FD Trinitron Approx. 91cm
Sound Output	Left/Right: Subwoofer	2x20W (music power), 2x10W (RMS) 1x30W (music power), 1x15W (RMS)
Power Consumption	KV-32NX200 KV-36NX200	154W (1w standby) 182W (1w standby)
Dimensions (w x h x d)	KV-32NX200 KV-36NX200	Approx. 910 x 445.5 x 590mm Approx. 1010 x 645 x 607mm
Weight	KV-32NX200 KV-36NX200	Approx. 67kg Approx. 87kg
Rear Terminals	1	21-pin Euro connector (CENELEC standard) including audio/video input, RGB input, TV audio/video output.
	2	21-pin Euro connector (CENELEC standard) including audio/video input, RGB input, TV audio/video output
	3/3	21-pin Euro connector (CENELEC standard) including audio/video input, S-video input, selectable audio/video output.
		Conditional Access Module
		RF In
		Audio output - RCA phono jacks
Front Terminals	4	Video input - phono jack
	4	S video input - 4 pin DIN
	4	Audio inputs - phono jacks
		Headphones jack - minijack stereo
Accessories Supplied	RM-939 remote control (1) IEC designated size AA (R6) battery (2) RF Loopthrough cable	

Design and specification are subject to change without notice

Troubleshooting

Here are some simple solutions to problems which may affect the picture and sound.

Problem	Possible causes	Solutions
No picture, no sound.	• Power off • TV in standby.	• Plug in the TV • Press the button on the front of the TV. If the indicator is on press the I/ button on the remote control.
	• Aerial disconnected.	• Check aerial connection
Poor or no picture (screen is dark), but good sound.	• Picture preset level adjustment	• Select 'Picture Adjustment' menu then adjust adjust the brightness, picture and colour levels.
No picture on any channel after digital tuning.	• No digtal transmission in your area.	• Tune in all the Analogue channels available using the 'Manually tuning analogue signals' instructions of this manual to tune in available analogue channels, then contact local installer to find out when digital transmissions begin in your area.
	• No digital transmissions from the transmitter you are currently using. • Unsuitable aerial.	• Contact a local installer to find out which transmitter you should be pointing your aerial at. • Change your aerial to cover the channels used by digital programmes. • Ensure aerial is correctly aligned to transmitter.
	• Weak signal.	• Ensure aerial is is plugged directly into the TV (not through other equipment). • Upgrade to a higher gain aerial.
Some channels are blank.	• Scrambled or subscription-only channel.	• Subscribe to pay-per-view broadcaster.
	• Programme used only for data (no picture or sound).	• See 'Skipping a programme' section. • See 'Re-arranging your channels' section.
	• Programme not being transmitted.	
Standby indicator flashing.	• Fault (irregular flash)	• Do not open the cabinet, refer to qualified personnel. • Contact nearest SONY Service Centre.
	• Digital mode Timer Record active (regular flash).	• Will clear when Timer Recording stops.
Good picture, no sound	• Volume control.	• Press the + button on the remote control. • If is displayed on the screen, press the button on the remote control.
Poor picture quality	• Wrong external mode selected for an RGB video source.	• Press the button repeatedly until the RGB symbol is displayed on screen.
No colour on colour programmes	• Colour level setting.	• Select 'Picture Adjustment' menu then adjust the colour setting.
Remote control does not function	• Batteries low.	• Replace batteries.
Distorted picture when changing programmes or selecting teletext	• Inputs from external equipment not switched off.	• Switch off all additionally connected equipment.

- **If you continue to have these problems, have your TV serviced by qualified personnel or you can contact the Sony UK Digital HelpLine on 0870 600 1717.**
- **NEVER open the casing yourself.**

SECTION 2 DISASSEMBLY

2-1. Rear Cover Removal

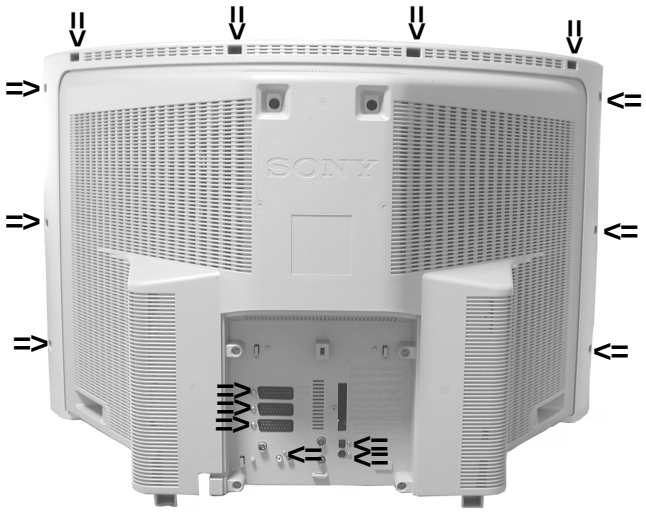

Remove the rear cover fixing screws indicated and pull the rear cover backwards away from the set.

2-2. Speaker Box Removal

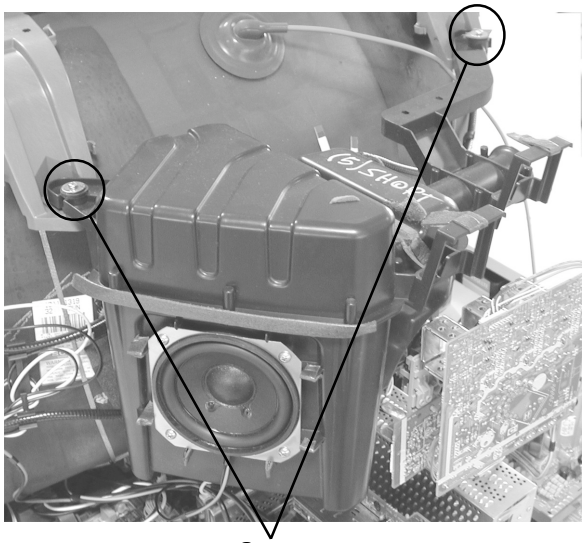

Screws

To remove the speaker box assembly remove the two screws circled and unplug the speaker lead from connector CN1202 on the 'A' board. The assembly can then be lifted gently away from its supporting arms.

2-3. Chassis Removal and Refitting

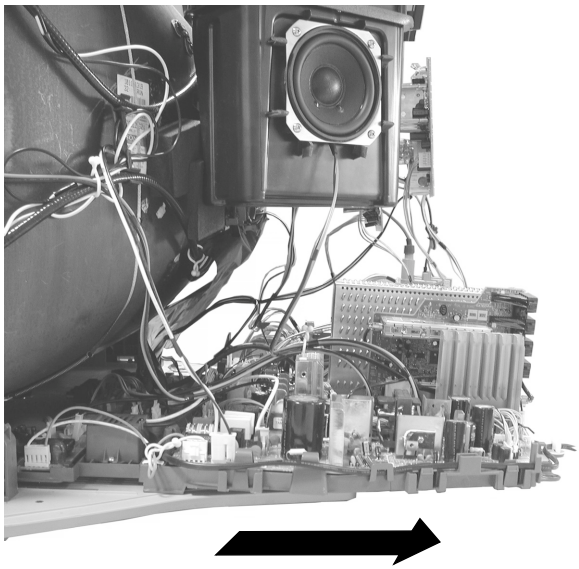

To remove lift the main bracket rear slightly and slide the chassis away from the beznet. Ensure that the interconnecting leads are released from their purse locks to prevent damage being caused.

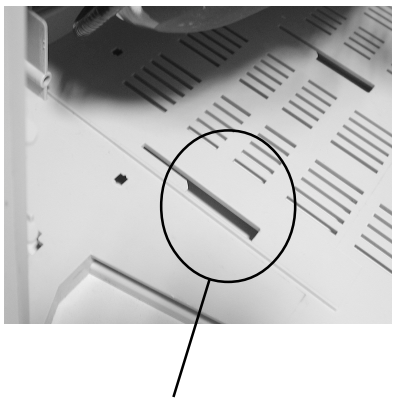

When refitting the chassis ensure that the main bracket is located in the beznet guide slots before sliding the chassis forwards. Refit the inter-connecting leads in their respective purse locks.

2-4. G1 Board Removal

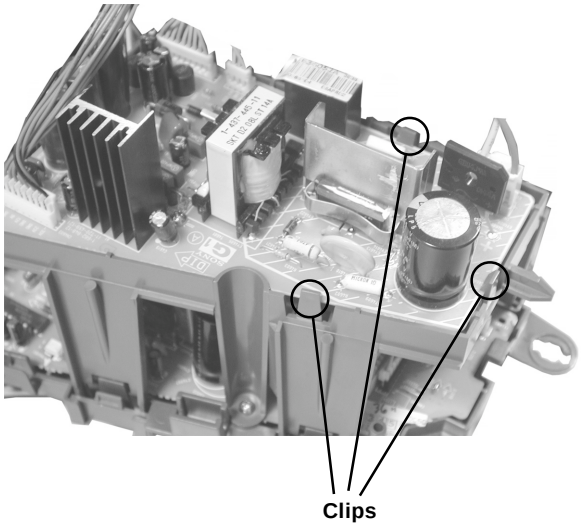

To remove the G1 board release the three clips circled and ease the board gently away from the support bracket.

2-5. G Board Removal

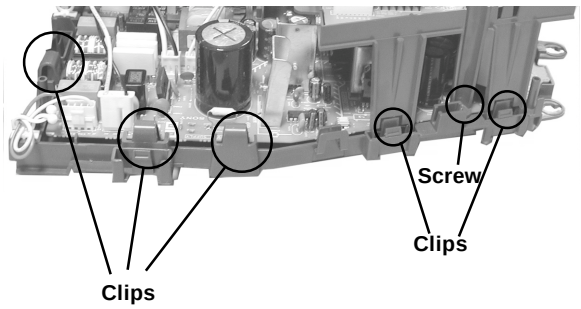

To remove the G Board first remove the G1 bracket by removing the screw circled and releasing the four clips (two on each side of the bracket).
The G Board can the be removed by releasing the clips circled and easing the board gently away from the support bracket.

2-6. D2 Board Removal

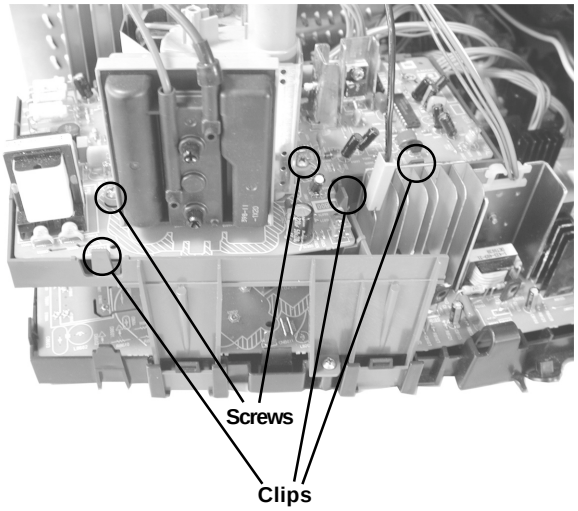

To remove the D2 board remove the two screws circled, release the clips circled and ease the board gently away from the support bracket.

2-7. D1 Board Removal

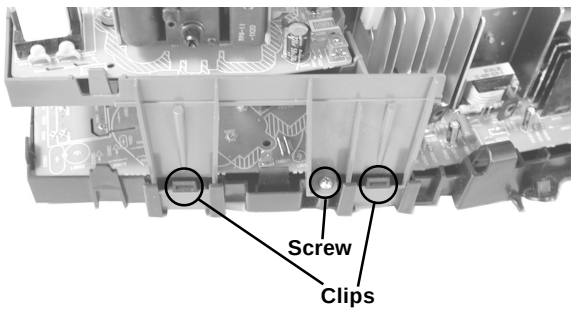

To remove the D1 board first remove the D2 bracket by removing the two screws (one on each side of the bracket) and releasing the four clips (two on each side of the bracket).
The D1 board can then be removed using the same method as the G board.

2-8. Service Position

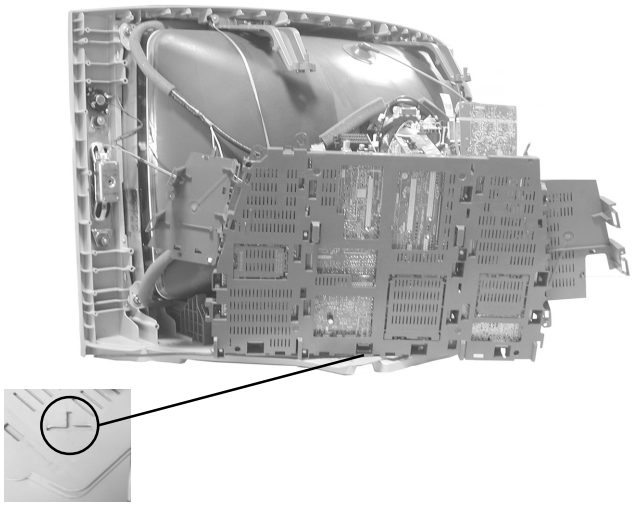

To place the chassis in the service position, remove the speaker assembly box (see 2-2.), remove the G1 and D2 brackets and position on the side of the main bracket as shown above. Insert the main bracket firmly into the T-slot located on the left corner of the beznet as indicated (see inset). To gain access to the underside of the boards follow the instructions on page 19. [Removal and Replacement of the main bracket bottom plates].

2-9. Wire Dressing 1

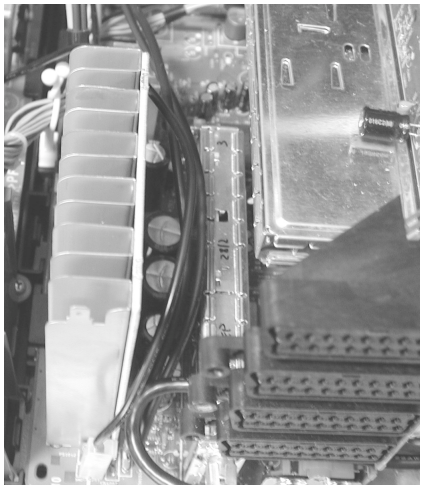

To avoid damage to the ground interconnecting leads from the sharp edges of the heatsink they must be dressed as shown above between the rear of the heatsink and the tuner.

2-10. Wire Dressing 2

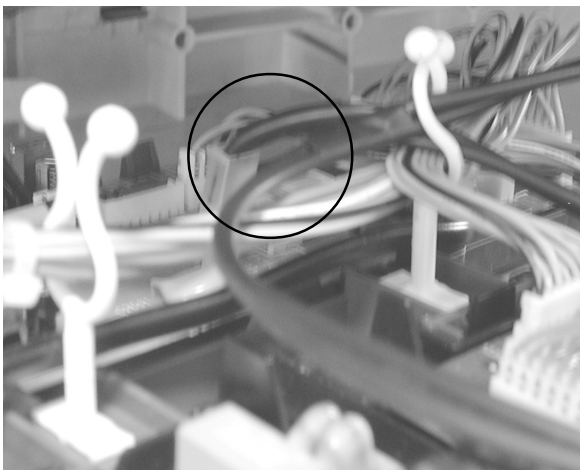

The sheathed end of the ground connecting lead must be plugged into the F3 board to avoid the possibility of the AC mains power touching ground.

2-11. Wire Dressing 3

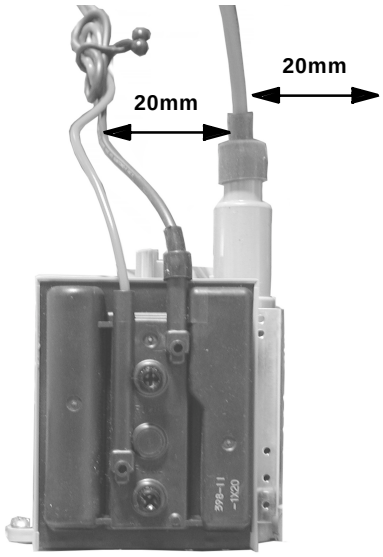

Ensure that wires do not touch heatsinks and high temperature hotspots. All wires must be kept at a minimum distance of 20mm away from the EHT lead

2-12. Picture Tube Removal

WARNING:
BEFORE REMOVING
THE ANODE CAP

High voltage remains in the CRT even after the power is disconnected. To avoid electric shock, discharge CRT ***before*** attempting to remove the anode cap. Short between anode and CRT coated earth ground strap.

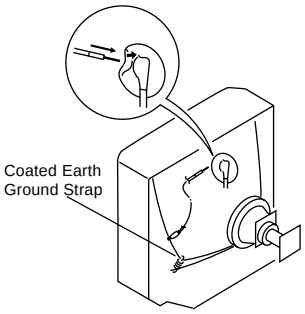

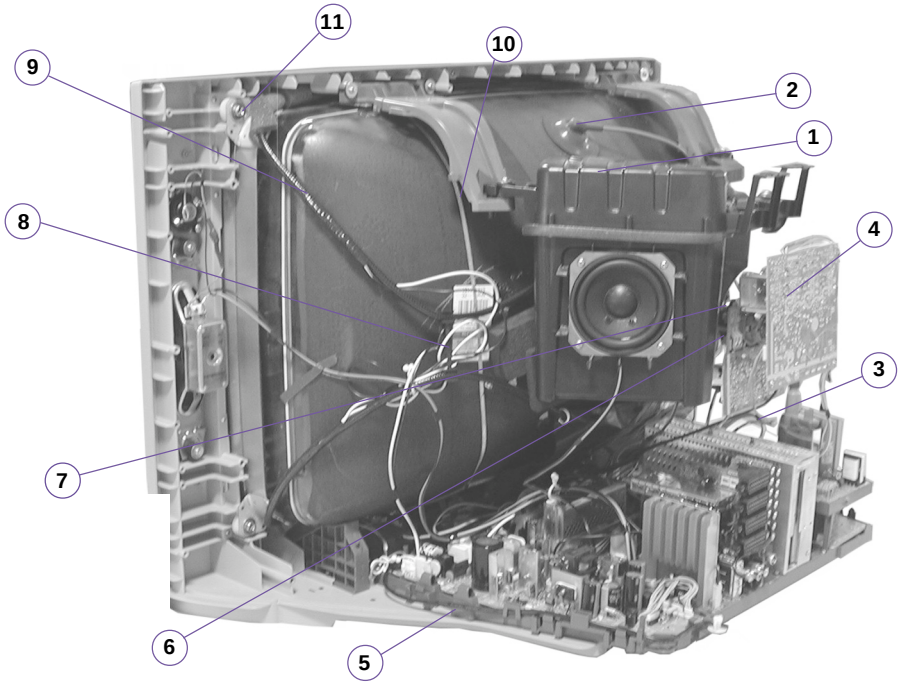

1. Remove Speaker Box assembly.
2. Discharge the anode of the CRT and remove the anode cap.
3. Unplug all interconnecting leads from the Deflection yoke, neck assy, degaussing coils and CRT grounding strap.
4. Remove the C1 Board from the CRT.
5. Remove the chassis assembly.
6. Loosen the Neck assembly fixing screw and remove.
7. Loosen the Deflection yoke fixing screw and remove.
8. Place the set with the CRT face down on a cushion and remove the Degaussing Coil holders.
9. Remove the Degaussing Coils.
10. Remove the CRT grounding strap and spring tensioners.
11. Unscrew the four CRT fixing screws [located on each CRT corner] and remove the CRT.
    [Take care not to handle the CRT by the neck.]

Removal of the Anode-Cap

REMOVAL PROCEDURE.

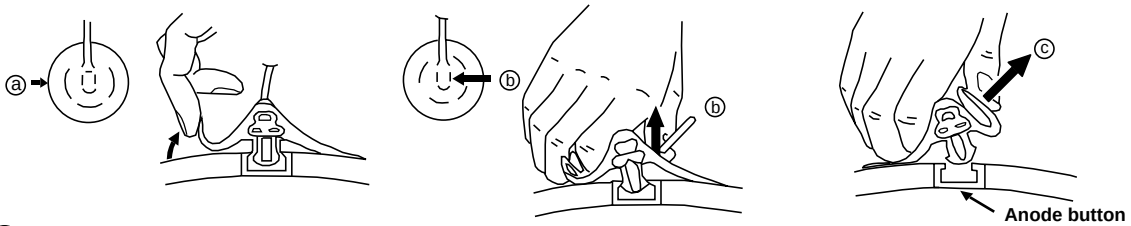

① Turn up one side of the rubber cap in the direction indicated by the arrow ⓐ

② Using a thumb pull up the rubber cap firmly in the direction indicated by the arrow ⓑ

③ When one side of the rubber cap is separated from the anode button, the anode-cap can be removed by turning up the rubber cap and pulling it up in the direction of the arrow ⓒ

How to handle the Anode-Cap

1. To prevent damaging the surface of the anode-cap do not use sharp materials.
2. Do not apply too great a pressure on the rubber, as this may cause damage to the anode connector.
3. A metal fitting called a shatter hook terminal is fitted inside the rubber cap.
4. Do not turn the rubber foot over excessively, this may cause damage if the shatter hook sticks out.

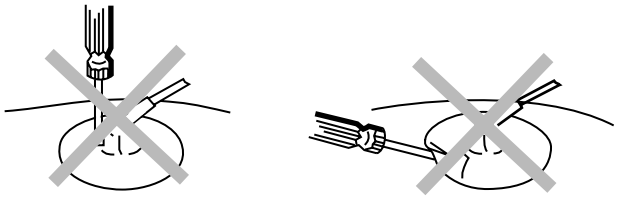

REMOVAL AND REPLACEMENT OF THE MAIN-BRACKET BOTTOM PLATES.

(1) REMOVING THE PLATES

In the event of servicing being required to the solder side of the A, D1 or G printed wiring boards, the bottom plates fitted to the main chassis bracket require to be removed.
This is performed by cutting the gates with a sharp wire cutter at the locations indicated by the arrows.

Note : There are 3 plates fitted to the main bracket and secured by 3 gates.
Only remove the necessary plate to gain access to the printed wiring board.

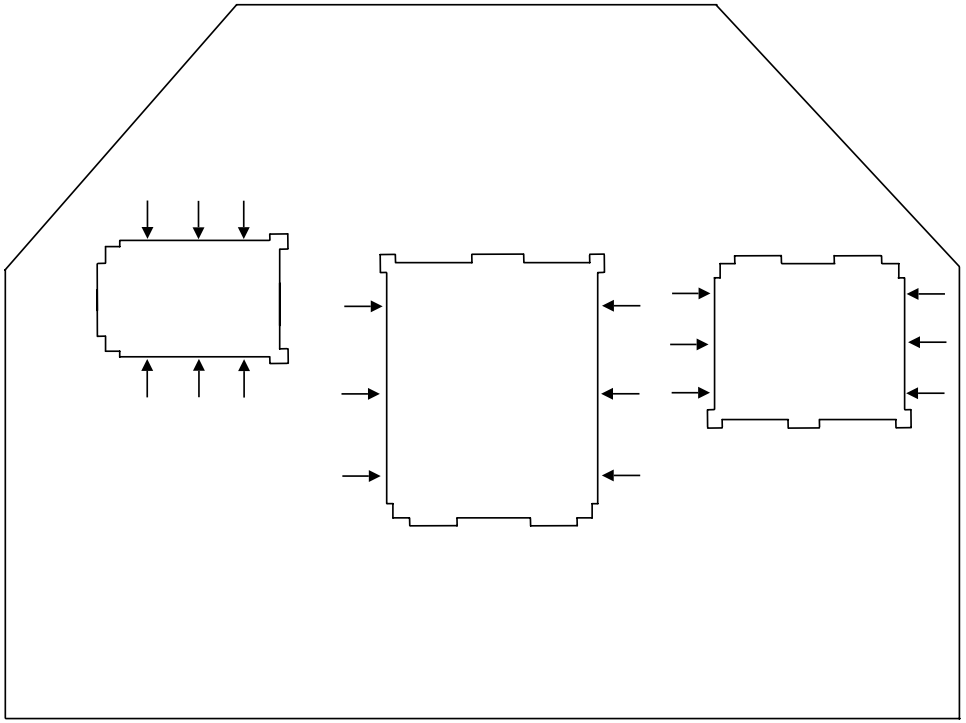

⚠ For safety reasons, on no account should the plates be removed and not refitted after servicing.

(2) REFITTING THE PLATES

Because the plates differ in size it is important that the correct plates are refitted in their original location.

Please note that the plates need to be rotated 180 degrees from their cut position to allow the tabs to be fitted into their catch positions.

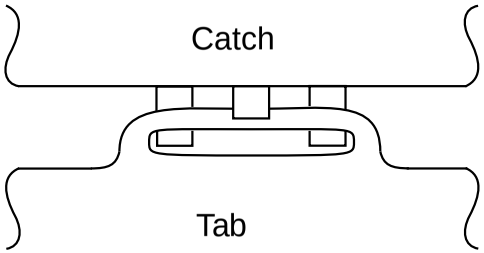

SECTION 3 SET-UP ADJUSTMENTS

- When complete readjustment is necessary or a new picture tube is installed, carry out the following adjustments.
- Unless there are specific instructions to the contrary, carry out these adjustments with the rated power supply.
- Unless there are specific instructions to the contrary, set the controls and switches to the following settings :

  Contrast ..... normal

  Brightness ..... normal

Carry out the adjustments in the following order :

3-1. Beam Landing and Geometry.
3-2. Convergence.
3-3. Focus.
3-4. White Balance.

Note : Test equipment required.
1. Color bar/pattern generator.
2. Degausser.
3. Oscilloscope.
4. Digital multimeter.

3-1. Beam Landing

Preparation :

1. In order to reduce the influence of geomagnetism on the set's picture tube, face it in an easterly or westerly direction.
2. Switch on the TV set's power and degauss with a degausser.

(1) Adjustment of Correction Magnet for Y-Splitting Axis.

1. Input a crosshatch signal from the pattern generator.
2. Set the Picture control to minimum and confirm that the Brightness control is set to normal.
3. Position the neck assembly as indicated in Fig.3-3.
4. Loosen the deflection yoke fixing screw.
5. Move the deflection yoke as far forward as is possible.
6. Adjust the upper and lower pin symmetrically by opening or closing the Y-splitting axis correction magnets located on the neck assembly. [See Fig 3-2]
7. Return the deflection yoke to its original position and re-tighten its fixing screw.

Fig.3-1

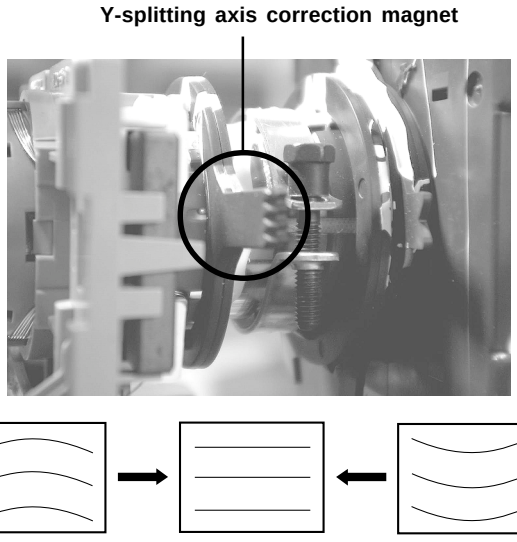

Fig.3-2

Caution :
High voltages are present on the Deflection yoke terminals - take care when handling the Deflection yoke whilst carrying out adjustments.

(2) Landing and Geometry

Note : Before carrying out the following adjustments adjust the magnets as indicated on page 21 [See Fig.3-4].

1. Input a crosshatch signal from the signal generator.
2. Rough-adjust the focus and horizontal convergence.
3. Switch from the crosshatch pattern to an all-red pattern.
4. Move the deflection yoke backwards and adjust with the purity magnet so that the red is at the centre and it aligns symmetrically [See Fig.3-5].
5. Move the deflection yoke forward to the point where the entire screen just becomes red [Mark its position].
6. Move the deflection yoke further forward until the screen just changes colour at the edges. [Mark its position].
7. Position the deflection yoke between the two marks indicated above.
8. Input a crosshatch pattern from the pattern generator and rotate the deflection yoke so that the horizontal lines are parallel with the top and bottom of the screen.
9. When the position of the deflection yoke has been determined, fasten it with its fixing screw.
10. Once dy rotation and swing left and right for h linearity is ok on cross hatch pattern, insert dy wedges. [See Fig.3-6].
11. Switch the pattern generator to green then blue and confirm the purity.
12. If the beam does not land correctly in all the corners of the screen, use disk magnets to correct it. [Confirm the corner landing for green and blue].
13. Re-check geometry for landing magnet effect. Adjust using deflection menu. [TT Mode].

Fig.3-3

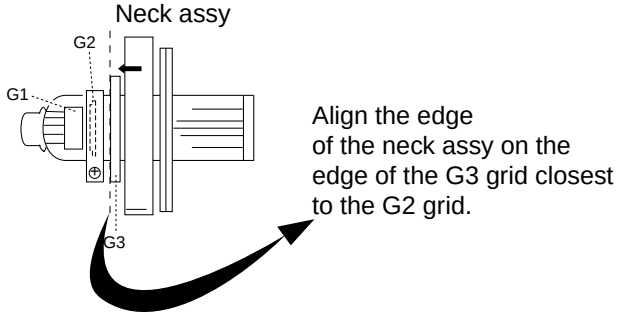

Fig.3-4

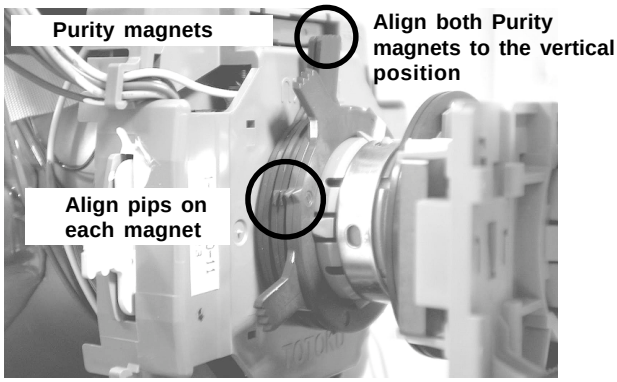

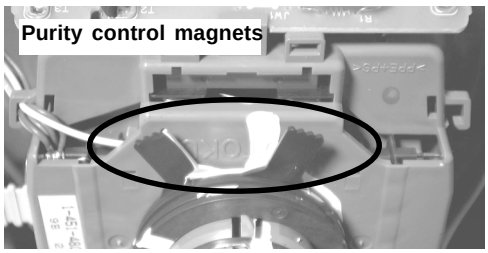

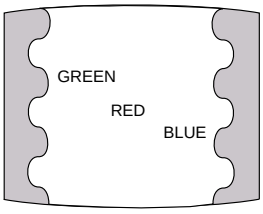

3-2. Convergence

(1) Screen centre convergence [Static convergence]

1. Input a dot pattern signal from the pattern generator.
2. Normalize the picture setting.
3. [Moving vertically], adjust the V.STAT magnet so that the vertical red, green and blue dots coincide at the centre of the screen.

Fig.3-5

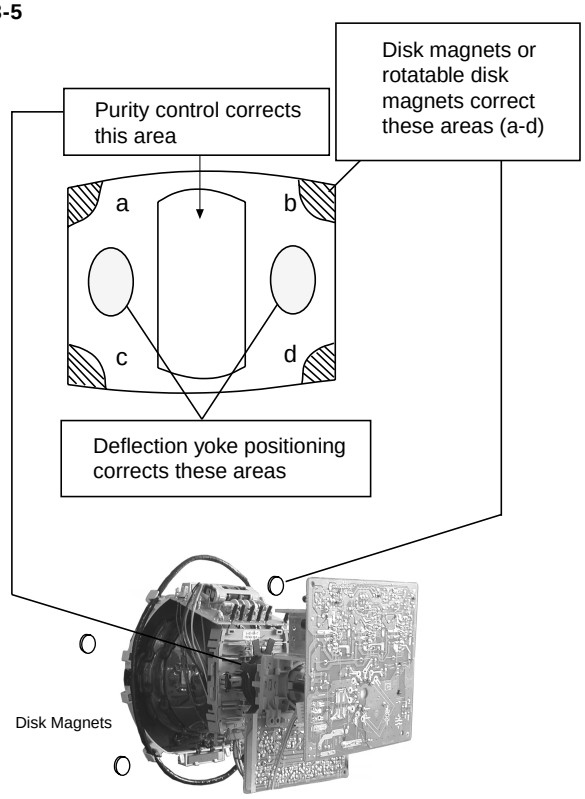

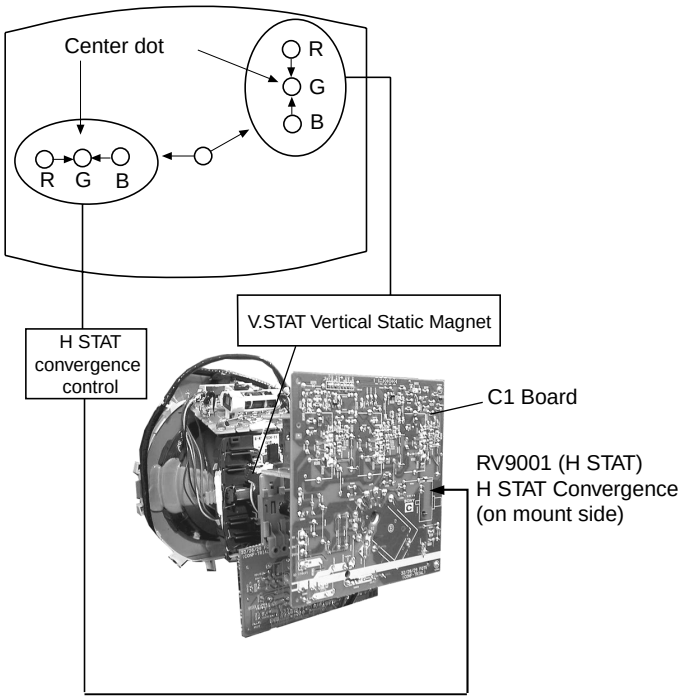

By opening or closing the V.STAT magnet, the red green and blue dots move in the direction indicated below.

Fig.3-6

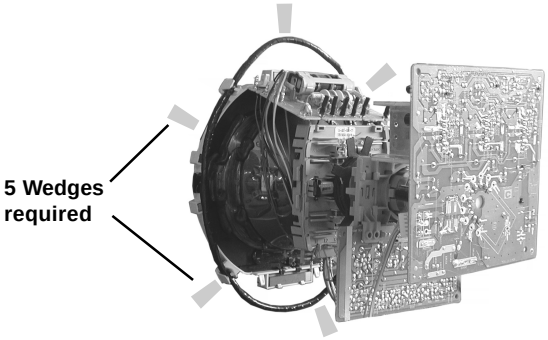

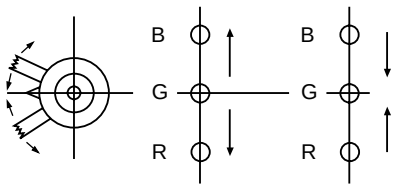

Note: Do not adjust the H.STAT by rotating the V.STAT magnets as this can affect the focus setting.

4. Correction for HMC [Horizontal mis-convergence] and VMC [Vertical mis-convergence] by using the BMC [Hexapole] magnet.

a). HMC correction by BMC [Hexapole] magnet and movement of the electron beam.

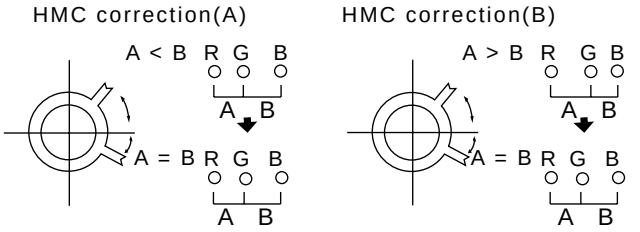

b). VMC correction by BMC [Hexapole] magnet and movement of the electron beam.

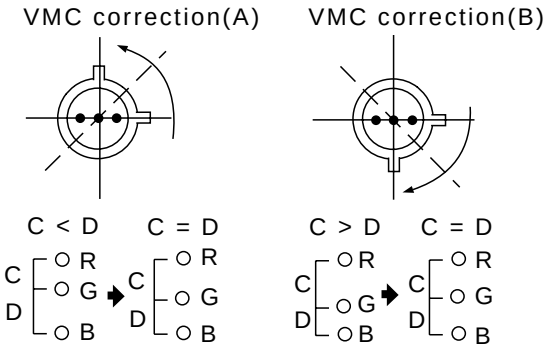

HAMP Adjustment

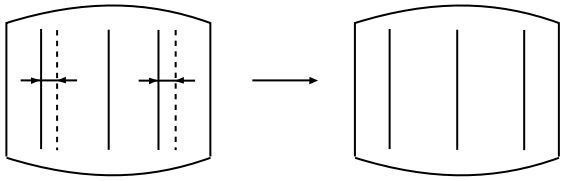

Adjust the HAMP using HAMPL and HAMPR registers in the Dynamic Convergence section of the service menu.

HTIL Adjustment

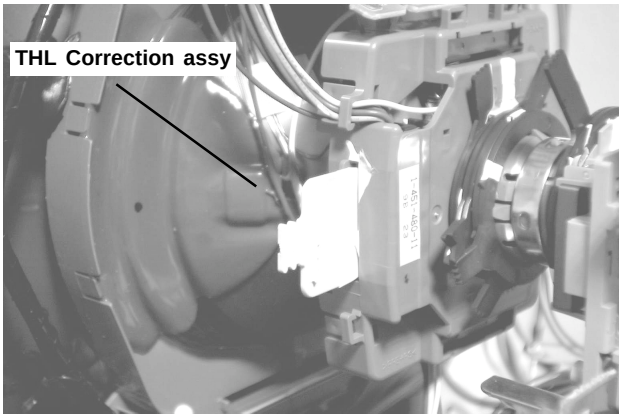

HTIL correction can be performed by adding a THL correction assembly to the Deflection yoke.

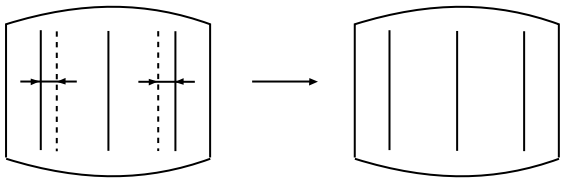

YCH Adjustment

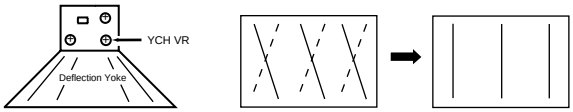

TLV Adjustment

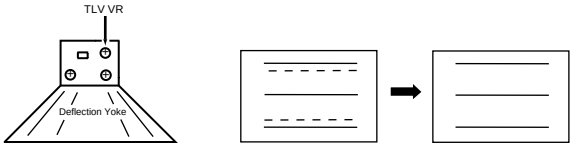

H-TRAP Adjustment

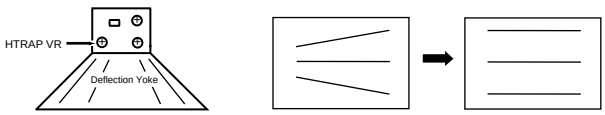

The H-TRAP should not be adjusted unless absolutely necessary as it affects the TLV settings.

Layout of each control

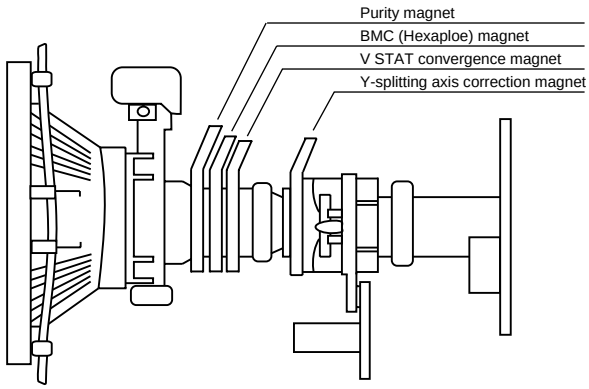

Note : If you are unable to adjust the corner convergence properly, this can be corrected with the use of permalloy magnets.

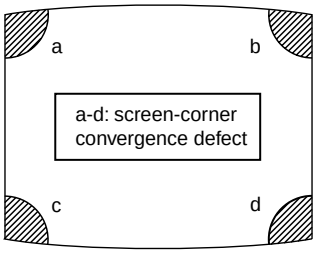

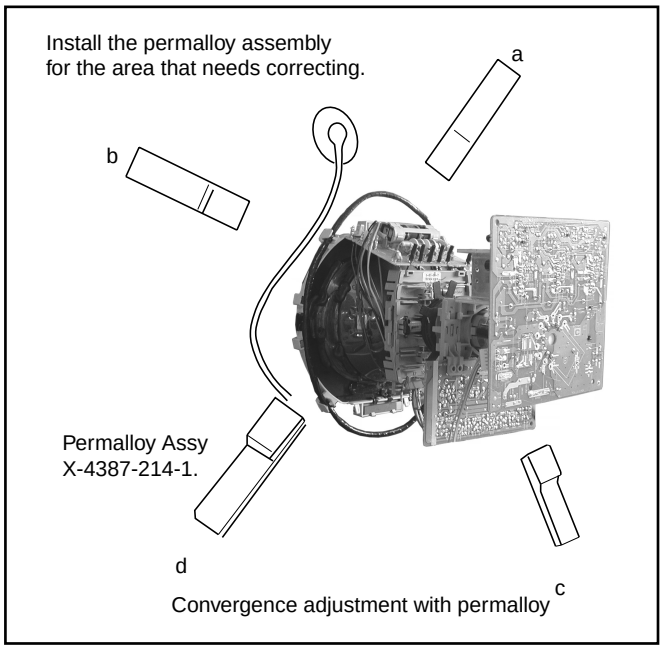

3-3. Focus Adjustment

1. Receive a cross hatch pattern from a video generator.
2. Adjust the focus control located on the flyback transformer to the best level at the centre of the screen.
3. Check left and right x-axis vertical line thickness and adjust to make them as thin as possible.
4. Considering x-axis and centre, adjust to make uniform.
5. If no cross hatch signal is possible, follow the next three steps.
6. Receive a television broadcast signal.
7. Normalize the picture setting.
8. Adjust the focus control located on the flyback transformer to obtain the best focus at the centre of the screen.
   Bring only the centre area of the screen into focus, the magenta-ring appears on the screen. In this case, adjust the focus to optimize the screen uniformly.

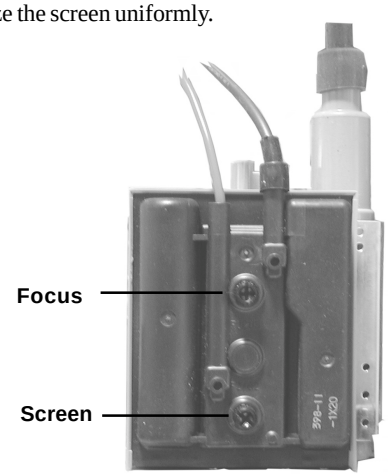

3-4. Screen (G2), White Balance

[Adjustment in the service mode using the remote commander]

G2 adjustment

1. Input a dot signal from the pattern generator.
2. Set the Picture, Brightness and Colour to minimum.
3. Apply 165V DC from an external power supply to the R, G and B cathodes of the CRT.
4. Whilst watching the picture, adjust the G2 control [SCREEN] located on the flyback transformer to the point just before the flyback return lines disappear.

White balance adjustment for TV mode

1. Input an all-white signal from the pattern generator.
2. Program the Remote Commander for operation in Service Mode. [See Page 24].
3. Enter into the 'Service Mode' by pressing 'VIDEO' button twice and 'MENU' on the Service Commander.
4. Select 'Device Register Setting' from the on screen menu display and press 'Right Arrow'.
5. Select 'Backend' from the on screen menu display and press 'Right Arrow'.
6. Set the 'Contrast' to MAX.
7. Set the 'R-Drive' to 45.
8. Adjust the 'G-Drive' and the 'B-Drive' so that the white balance becomes optimum.
9. Press the 'OK' button to write the data for each item.
10. Set the 'Contrast' to MIN.
11. Set the 'R-Cutoff' to 35.
12. Adjust the 'G-Cutoff', and the 'B-Cutoff' with the left and right buttons on the remote commander so that the white balance becomes optimum.
13. Press the 'OK' button to write the data for each item.

SECTION 4 CIRCUIT ADJUSTMENTS

4-1. Electrical Adjustments

Service adjustments to this model can be performed using the supplied remote Commander RM-939.

Programming the Remote Commander for Operation in Service Mode

1. Press the VCR/TV/DVD button until the TV LED lights.
2. Press and hold the yellow button for approx. 5 seconds until the TV LED flashes quickly.
3. Press 99999. All three LED's should light.
   The remote commander is now set to Service Mode.
4. To return the remote commander to normal operation mode repeat steps 1. and 2. then press 00000. All three LED's should light.
   The remote commander is now set to normal mode.

Setting the TV into Service Mode

1. Program the remote commander for operation in Service Mode as described above.
2. Turn on the TV main power switch.
3. Press the video standby button on the remote commander twice.
   'TT __' will appear in the upper right corner of the screen.
   Other status information will also be displayed.
4. Press 'MENU' on the remote commander twice to obtain the following menu on the screen.

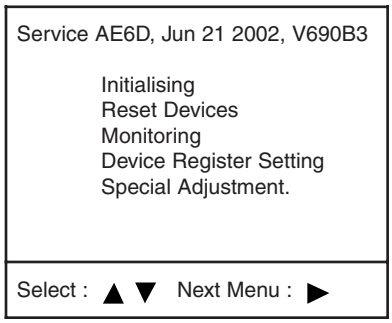

5. Move to the corresponding adjustment item using the up or down arrow buttons on the Remote Commander.
6. Press the right arrow button to enter into the required menu item.
7. Press the 'Menu' button on the Remote Commander to quit the Service Mode when all adjustments have been completed.

Note :

- After carrying out the service adjustments, to prevent the customer accessing the 'Service Menu' switch the TV set OFF and then ON.
- Certain menu items are only available in production mode.

Initialising Menu

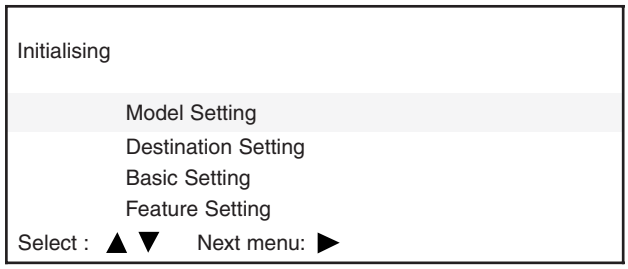

Model Setting

The menu contains a list with all the available models of this software to set up the TV set in an easy way. The selection of a model is setting data for its features and hardware resources which cannot be detected by the automatic power on H/W detection as well as a special *model byte* to get an unique model identification for models which cannot be differed by features and hardware resources (e.g. KD-32NS200 and KD-36NX200)

Before data is set, the user will be asked if he really wants to set a new model. If the user agrees, automatically the destination setting menu is shown.

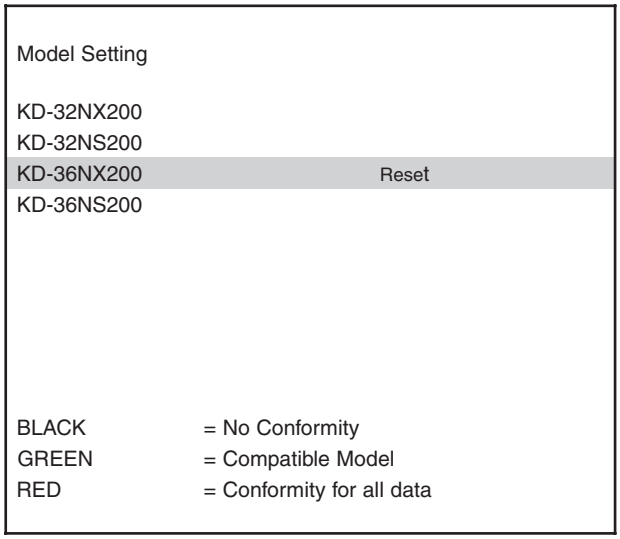

Table.4-1

Indication of Model Compatibility.

Black:
If any data does not match to specific model, the model name is displayed in black.
Green:
All data which is checked by model setting menu concurs to model except model byte.
Red:
All data which is checked by model setting menu concurs to model including model byte.

Note:
After selecting a model, it may be necessary to reset some devices to get the correct data. (Treble/Bass Offset of Sound, deflection adjustments, ...)

Basic Setting

Basic setting

No	Descr	Min	Max	Data
1	Sys.B/G	OFF	ON	ON
2	Sys.D/K	OFF	ON	ON
3	Sys.L	OFF	ON	OFF
4	Sys.I (UK)	OFF	ON	OFF
5	Sys.I (IRL)	OFF	ON	OFF
6	TXTNat.option	1	4	3
7	16:9 CRT	OFF	ON	OFF
8	Sub-woofer	OFF	ON	ON
9	Auto stand-by	OFF	ON	ON
10	Comb-filter	OFF	ON	ON
11	Auto YC det	OFF	ON	ON
12	Auto comb det	OFF	ON	ON
13	AV2 Available	OFF	ON	ON
14	AV3 Available	OFF	ON	ON
15	AV4 Available	OFF	ON	ON
16	AV5 Available	OFF	ON	OFF
17	SECAM Tape	OFF	ON	ON
18	AV1 Sound Mute	OFF	ON	ON

Table.4-2

Feature Setting

Feature setting

No	Descr	Min	Max	Data
1	PAP	OFF	ON	OFF
2	PAT	OFF	ON	ON
3	INDEX	OFF	ON	ON
4	TeleText	OFF	ON	ON
5	EPG	OFF	ON	ON
6	TeleWeb	OFF	ON	OFF

Table.4-3

Device Register Setting

Backend
Deflection
Ext Deflection
Dynamic Convergence
Colour Decoder 1
Audio / Video Switch
Mid - X
External PLL Mid - X
Gate Array Chip
Sound
Digital NR

Table.4-4

Audio / Video Switch

No	Descr	Def	Min	Max	Data
1	CVOUT1	0	0	9	0
2	CVOUT2	2	0	9	0
3	LO0 CTRL	OFF	OFF	ON	OFF
4	LO1 CTRL	OFF	OFF	ON	OFF
5	YCOUT 1	2	0	7	2
6	YCOUT 2	0	0	7	0
7	ZCD SW	OFF	OFF	ON	OFF
8	AOUT3MUTE	OFF	OFF	ON	OFF
9	AOUT 1	3	0	7	3
10	AOUT 2	1	0	7	1
11	GROUP DEL	16	0	31	16
12	AOUT 3	3	0	7	3
13	AOUT3VOLC	4	0	7	4
14	AOUT3VOLF	4	0	7	4
15	AOUT3 L/R	0	0	3	0
16	GD1 SW	ON	OFF	ON	ON
17	GD2 SW	ON	OFF	ON	ON
18	SYNC1	1	0	1	1
19	SYNC2	1	0	1	1
20	SCONT 1	3	2	3	3
21	VIDEO 1	4	0	3	4
22	AUDIO 1	0	0	3	0
23	SCONT 2	2	2	3	2
24	VIDEO 2	4	0	3	4
25	AUDIO 2	0	0	3	0
26	SCONT 3	2	2	3	2
27	VIDEO 3	0	0	3	0
28	AUDIO 3	1	0	3	1

Table.4-5

Dynamic Convergence

No	Descr	Def	Min	Max	Data
1	Range	63	0	63	63
2	V Stat	17	0	63	14
3	H stat	31	0	63	31
4	H amp l	40	0	63	33
5	H amp r	40	0	63	33
6	Up Y	31	0	63	31
7	Low Y	31	0	63	31
8	Y up l	45	0	63	45
9	Y up r	31	0	63	31
10	Y low l	31	0	63	31
11	Y low r	45	0	63	45
12	Mbow up l	31	0	63	31
13	Mbow up r	31	0	63	31
14	Mbow low l	31	0	63	31
15	Mbow low r	31	0	63	31
16	TCorPCtrl	OFF	OFF	ON	OFF
17	TopCorPin	31	0	63	31
18	BCorPCtrl	OFF	OFF	ON	OFF
19	BotCorPin	31	0	63	43

Table.4-6

Colour Decoder 1

No	Descr	Def	Min	Max	Data
1	CLK SEL	0	0	3	0
2	SYS CLK	ON	OFF	ON	ON
3	DSP CLK	3	0	3	3
4	DEL	OFF	OFF	ON	OFF
5	PLL	OFF	OFF	ON	OFF
6	REF CLK	1	0	3	1
7	AD SEL	0	0	3	0
8	DCLP ON	OFF	OFF	ON	OFF
9	CLP OFF	OFF	OFF	ON	OFF
10	COMB SEL	OFF	OFF	ON	OFF
11	AW OFF	OFF	OFF	ON	OFF
12	SYS MODE	0	0	15	0
13	SIG FORM	12	0	15	12
14	CLIP LEV	0	0	3	0
15	Y NR	0	0	3	0
16	C NR	0	0	3	0
17	BLK MODE	2	0	3	2
18	Y LEV	102	0	255	102
19	C LEV	108	0	255	108
20	OSD LEV	0	0	3	0
21	OSD RES	OFF	OFF	ON	OFF
22	SHP COR	0	0	3	0
23	FUP2	1	0	3	1
24	YC DLY ADJ	6	0	15	6
25	A PED	0	0	3	0
26	DC TRAN	0	0	3	0
27	SUB SHP	9	0	15	9
28	Y EQ	3	0	7	3
29	SHP FO	ON	OFF	ON	ON
30	APDATK	0	0	3	0
31	APDHLD	0	0	3	0
32	APDAREA	0	0	3	0
33	APDHIS	0	0	3	0
34	DCTRTC	0	0	3	0
35	DCLP TC	0	0	3	0
36	CLP POS	7	0	15	7
37	C EQ	0	0	3	0
38	C BPF	0	0	3	0
39	CDIF TRAP	OFF	OFF	ON	OFF
40	SSEP TC	OFF	OFF	ON	OFF
41	INT COMB	0	0	3	0
42	SUB HUE	7	0	15	7
43	CLP GR LIN	0	0	3	0
44	CLP ADAP G	OFF	OFF	ON	OFF
45	HS SLICE	0	0	3	0
46	VS SLICE	1	0	3	1
47	STIP TC	1	0	3	1
48	SYNC LPF	ON	OFF	ON	ON
49	SYNC FIL	OFF	OFF	ON	OFF
50	AFC GAIN	1	0	3	1
51	LOW GAIN	1	0	3	1
52	AFC SPDUP	ON	OFF	ON	ON
53	LOW CO	ON	OFF	ON	ON
54	HIGH CO	0	0	3	0
55	CD MODE1	0	0	3	0
56	CD MODE2	OFF	OFF	ON	OFF

Table.4-7

Colour Decoder 1 (cont)

No	Descr	Def	Min	Max	Data
57	CD MODE3	OFF	OFF	ON	OFF
58	HS POS	5	0	15	5
59	NTHRLND	OFF	OFF	ON	OFF
60	SLICE LEV	0	0	31	0
61	UPAREA	OFF	OFF	ON	OFF
62	UPTHIN	OFF	OFF	ON	OFF
63	X149J	OFF	OFF	ON	OFF
64	DM STC	OFF	OFF	ON	OFF
65	IN ST	OFF	OFF	ON	OFF
66	UP R LVL	ON	OFF	ON	ON
67	OFS LVL	OFF	OFF	ON	OFF
68	SLO FST	OFF	OFF	ON	OFF
69	FROM 43	2	0	3	2
70	FROMWIDE	2	0	3	2
71	FR TITLES	2	0	3	2
72	LPF L	ON	OFF	ON	ON
73	AW RESET	OFF	OFF	ON	OFF
74	DTO SLOPE1	0	0	255	0
75	DTO SLOPE2	0	0	255	0
76	DTO SLOPE3	0	0	255	0
77	SETUP CANC	0	0	15	0
78	V INT	7	0	15	7
79	EXT CLP PH	0	0	63	0
80	TEST OUT	OFF	OFF	ON	OFF
81	COL SYSTEM	8	0	15	8
82	RGB MODE	2	0	3	2
83	YSSEL	OFF	OFF	ON	OFF
84	N DET	OFF	OFF	ON	OFF
85	V ENHANCE	4	0	7	4
86	PNR	OFF	OFF	ON	OFF
87	V FREQ	0	0	3	0
88	N COMB	OFF	OFF	ON	OFF
89	AUTO SW	OFF	OFF	ON	OFF
90	SECAM TRAP	OFF	OFF	ON	OFF
91	BELL MODE	OFF	OFF	ON	OFF
92	SECAM KIL	1	0	3	1
93	ID POS	2	0	3	2
94	ID WID	ON	OFF	ON	ON
95	E-COL SYS	OFF	OFF	ON	OFF
96	E-INPUT	OFF	OFF	ON	OFF
97	E-HLOCK	OFF	OFF	ON	OFF
98	E-V FREQ	ON	OFF	ON	ON
99	E-WSS	OFF	OFF	ON	OFF
100	INT RESET	OFF	OFF	ON	OFF
101	SRC2SW	0	0	3	0
102	COMBSW	0	0	3	0
103	RGBSW	OFF	OFF	ON	OFF
104	SECAM BLK	1	0	3	1
105	V ENH LVL	1	0	3	1
106	SCMCDLY	OFF	OFF	ON	OFF
107	SCMID	OFF	OFF	ON	OFF
108	SCMADP	ON	OFF	ON	ON
109	KILL TIME	OFF	OFF	ON	OFF
110	KILL LVL	2	0	3	2
111	KN POS	5	0	7	5
112	KD WID	7	0	15	7

Table.4-8

Digital NR

No	Descr	Def	Min	Max	Data
1	NR Table	0	0	7	0
2	Lcc1	0	0	63	0
3	Lcc2	0	0	63	0
4	Lcc3	0	0	63	0
5	UVLim_Sel	0	0	7	0
6	BNR On	OFF	OFF	ON	ON
7	BNR On YH	OFF	OFF	ON	ON
8	BNR On YV	OFF	OFF	ON	ON
9	BNR On CH	OFF	OFF	ON	ON
10	BNR On CV	OFF	OFF	ON	ON
11	Bit Rate	0	0	3	0
12	B Phase H	0	0	7	7
13	B Phase V	0	0	7	5

Table.4-9

Mid-X

No	Descr	Def	Min	Max	Data
1	M H POS	0	-16	16	0
2	S H POS	0	-8	8	0
3	D YS SEL	1	0	3	1
4	D YS DELAY	7	0	7	7
5	D SYNC MOD	ON	OFF	ON	ON
6	Text Sharp	OFF	OFF	ON	OFF
7	Ext. PLL	OFF	OFF	ON	OFF
8	H Filter	0	0	3	0

Table.4-10

Ext. Deflection

No	Descr	Def	Min	Max	Data
1	DF Phase	185	0	255	185
2	DQP Phase	125	0	255	125
3	Mid Linear	135	0	255	135
4	H Linear	100	0	255	120
5	DQP ac amp	150	0	255	132
6	DQP dc lvl	148	0	255	126
7	H Cent 36"	0	0	255	80

Table.4-11

Backend

No	Descr	Def	Min	Max	Data
1	R-on	ON	OFF	ON	ON
2	G-on	ON	OFF	ON	ON
3	B-on	ON	OFF	ON	ON
4	D-col	0	0	3	0
5	Wb-Sw	OFF	OFF	ON	OFF
6	Gamma-L	OFF	OFF	ON	OFF
7	Contrast	40	0	63	40
8	BLK-Bottom	3	0	3	3
9	Hue	28	0	63	26
10	Colour-Axis	1	0	3	1
11	Colour	31	0	63	31
12	CTI-Level	2	0	3	2
13	Brightness	25	0	63	25
14	S-Abl	0	0	3	0
15	Sharpness	25	0	63	25
16	LTI-Level	0	0	3	0
17	R-Drive	35	0	63	35
18	PLimit	0	0	3	0
19	G-Drive	41	0	63	41
20	ABL-Mode	0	0	3	0
21	B-Drive	41	0	63	41
22	CTI-Mode	0	0	3	0
23	Sub Bright	6	0	63	6
24	Gamma	1	0	3	1
25	R-Cutoff	31	0	63	31
26	LTI-Mode	1	0	3	1
27	G-Cutoff	27	0	63	27
28	DPIC-Level	1	0	3	1
29	B-Cutoff	31	0	63	31
30	DC-Tran	1	0	3	1
31	Sub-Cont	8	0	15	8
32	LRGB2-Lvl	8	0	15	8
33	P-Abl	15	0	15	15
34	ABL-TH	0	0	15	0
35	CB-Off. P	32	0	63	54
36	CR-Off. P	29	0	63	11
37	CB-Off. S	54	0	63	63
38	CR-Off. S	1	0	63	63
39	Aging-W	OFF	OFF	ON	OFF
40	Aging-B	OFF	OFF	ON	OFF
41	System	1	0	3	1
42	Y-offset	7	0	15	7
43	VM-Level	1	0	3	1
44	Sharp. FO	ON	OFF	ON	ON
45	CD-Off	OFF	OFF	ON	OFF
46	Sharp. CD	2	0	3	2
47	Sharp. FI	0	0	3	0
48	Pre/Over	2	0	3	2
49	VM-Cor	0	0	3	0
50	VM-FO	2	0	3	2
51	VM-Limit	3	0	3	3
52	VM-Delay	2	0	3	2
53	Sub Colour	0	-8	8	0

Table.4-12

Deflection System Adjustment

1. Enter into the service mode and select 'Deflection' from the menu. The 'Deflection' adjustment menu will be displayed.
2. Select and adjust each item to obtain the optimum image.

Deflection

No	Descr	Def	Min	Max	Data
1	H-Size	34	0	63	34
2	H-Position	25	0	63	36
3	V-Size	31	0	63	51
4	V-Position	31	0	63	28
5	Pin-Amp	18	0	63	16
6	Up-CPin	37	0	63	41
7	Lo-CPin	37	0	63	40
8	AFC-Bow	31	0	63	27
9	AFC-Angle	31	0	63	28
10	Pin-Phase	28	0	63	25
11	V-Lin	7	0	15	8
12	S-Corr	8	0	15	12
13	Rotation-1	1	0	3	1
14	Rotation-2	15	0	15	15
15	H-Trap	15	0	31	1
16	H Linear	100	0	255	120
17	HC-Par-Amp	38	0	63	36
18	MP-Par-Amp	9	0	15	7
19	UpPin Axis	2	0	3	3
20	LoPin Axis	2	0	3	3
21	UpPin Gain	1	0	3	3
22	LoPin Gain	1	0	3	2
23	Akb-Tim	15	0	31	15
24	BLK-Off	ON	OFF	ON	OFF
25	AKB-Off	OFF	OFF	ON	OFF
26	Up-Blk	4	0	15	0
27	Lo-Blk	9	0	15	0
28	V-On	ON	OFF	ON	ON
29	Ew-Dc	OFF	OFF	ON	OFF
30	Uc-Pol	OFF	OFF	ON	OFF
31	Vblk-Sw	ON	OFF	ON	OFF
32	Sync-Phase	0	0	3	0
33	AFC-Mode	2	0	3	2
34	Rst-Sw	OFF	OFF	ON	OFF
35	Left-Blk	52	0	63	52
36	Clp-Phase	3	0	3	3
37	Right-Blk	30	0	63	30
38	Clp-Gate	OFF	OFF	ON	OFF
39	Hblk	ON	OFF	ON	ON
40	V-Aspect	47	0	63	47
41	Zoom-Sw	OFF	OFF	ON	OFF
42	Jmp-Sw	OFF	OFF	ON	OFF
43	V-Scroll	31	0	63	31
44	V-Freq	2	0	3	2
45	Up-Vlin	0	0	15	0
46	Lo-Vlin	0	0	15	0
47	V-Comp	0	0	15	6
48	H-Comp	0	0	15	0
49	VSaw1-Dc	7	0	15	7
50	Pin-Comp	7	0	7	4
51	VSaw1-Amp	0	0	31	0
52	AFC-Comp	0	0	7	0
53	MP-Par-Dc	13	0	15	15
54	HC-Par-Dc	63	0	63	31
55	Asp-Sw	OFF	OFF	ON	OFF
56	VDrv-SW	OFF	OFF	ON	OFF
57	HC-Par-Pha	31	0	63	31

Table.4-13

4-2. Volume Electrical Adjustments

Sub Colour Adjustment

1. Input a PAL colour bar signal.
2. Connect an oscilloscope to CN9001 pin 5 located on the C1 Board.
3. Enter into the 'Service Mode'.
4. Choose 'Backend' from the menu.
5. Adjust 'Sub Colour' data so that the right sides of the waveform are of equal height.

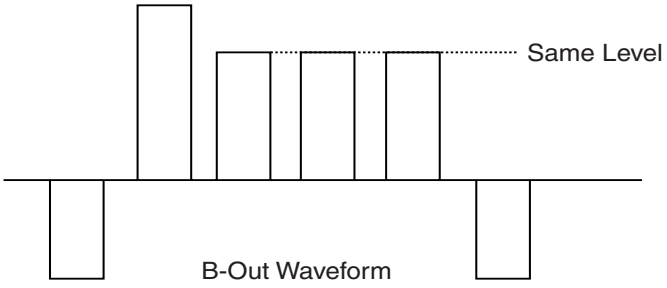

B-Out Waveform

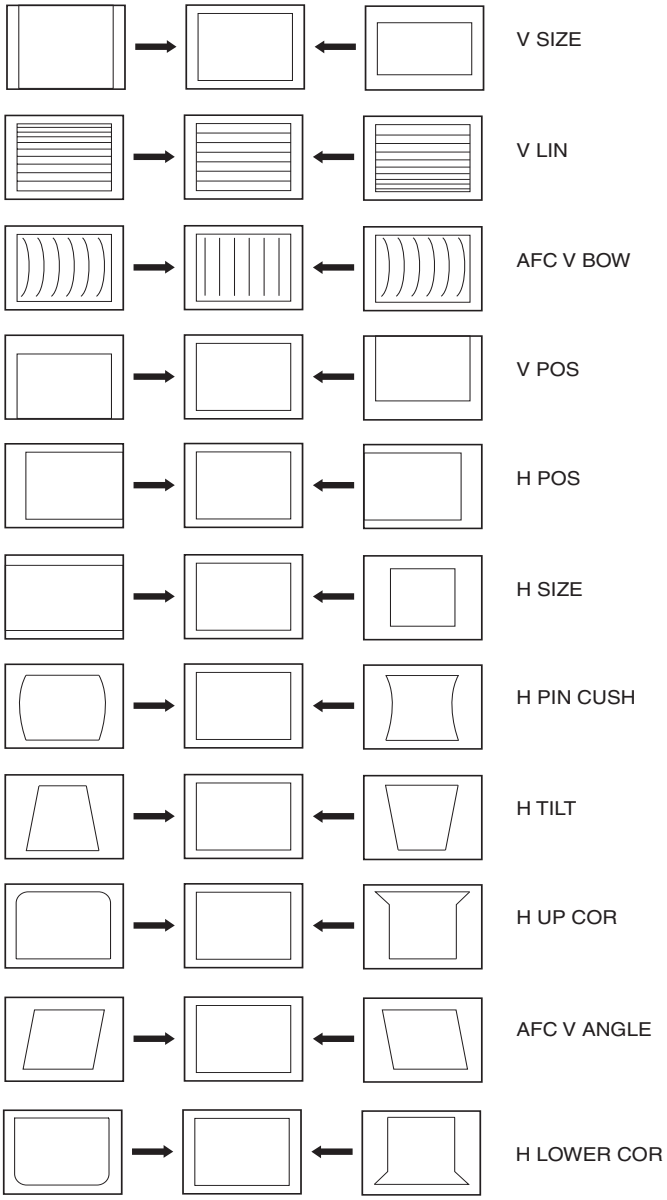

4-3. TEST MODE 2:

Is available by pressing the 'TEST' button twice, OSD 'TT' appears. The functions described below are available by selecting the two numbers. To release the 'Test mode 2', press 0 twice, press the TV button or switch the TV set into Stand-by mode. Pressing the two Local Control buttons (+ and -) during power ON will also switch into 'TT' mode or from standby mode press OSD, 5, volume plus, TV.
In 'TT' mode, it is possible to remove the Menu from the screen by pressing the Speaker Off button once. Pressing the Speaker OFF button a second time will cause the Menu to reappear. The function is kept even when the menu is not displayed on screen !!.

00	'TT' mode off
01	Picture maximum
02	Picture minimum
03	Set speaker/headphone Volume to 30%
04	Set speaker/headphone Volume to 50%
05	Set speaker/headphone Volume to 65%
06	Set speaker/headphone Volume to 80%
07	Ageing mode
08	Shipping Condition
09	No action
10	No action
11	Sub picture adjustment
12	Sub colour adjustment
13	Sub brightness adjustment
14	No action
15	Picture Rotation automatic function
16	Picture level 50%
17	Production monitor
18	No action
19	Production mode enable/disable
20	No action
21	Destination A, D, E display TV status
22	Destination B, Multi, display TV status
23	Destination A, D, E display TV status
24	Destination U, display TV status
25	Destination A, D, E display TV status
26	Destination B, Multi, display TV status
27	Destination K, display TV status
28	Destination R, display TV status
29	Geometry Adjustment 1
30	No action
31	Autostandby enable/disable
32	Geometry Adjustment 2
33	No action
34	Screen mode test
35	CRT 4:3 <> 16:9 ; TV status
36	Velocity Modulation
37	No action
38	DRC mode set to DRC 100
39	DRC mode set to DRC 50
40	No action
41	Re-initialise NVM
42	No action
43	Dual A sound
44	Dual B sound
45	Mono sound
46	Stereo sound
47	No action
48	Set NVM as non virgin
49	Set NVM as virgin
50	No action

51	Virtual dolby on/off
52	OSD mute on/off
53	Reset EPG services in NVM
54	No action
55	Internal software use only
56	Focus phase adjust
57	Focus DC level adjust
58	Copy internal NVM to external NVM on service connector
59	Copy external NVM on service connector to internal NVM
60	No action
61	Smartlink test
62	System L audio from baseband (toggle)
63	Copy the picture reset data from ROM into the picture reset location of NVM
63	Copy the actual adj picture data from NVM into the picture reset location of NVM
65	Reset errors
66	Ignore errors (toggle)
67	Reserved for IDTV (Manual EMMA Recovery)
68	No action
69	Personal ID reset
70	No action
71	Force PAL
72	Unforce PAL
73	No action
74	No action
75	Pin Amp/UC Pin adjust
76	LC Pin/Trap adjust
77	Reset deflection offsets
78	Balance left
79	Balance right
80	No action
81	Reserved for IDTV (Digital BER display On/Off - only in digital mode)
82	Reserved for IDTV (AV monitor mode On/Off - only in digital mode)
83	Reserved for IDTV (2K, 8K, 2K & 8K toggle - only in digital mode)
84	Reserved for IDTV (Set digital NVM default - only in digital mode)
85	Reserved for IDTV
86	Reserved for IDTV (Digital model setting (AE6D/FE2D) toggle - only in digital mode)
87	Local keys test
88	Reserved for IDTV (Digital shipping condition (clear tune database) - only in digital mode)
89	Reserved for IDTV
90	No action
91	14:9 mode
92	Smart mode
93	16:9 mode
94	Zoom mode
95	4:3 mode
96	Reserved for IDTV (TS path awitch (tuner/CI slot) - only in digital mode)
97	Reserved for IDTV (CTI mode - only in digital mode)
98	Reserved for IDTV (Auto EMMA Recovery enable/disable)
99	Display error monitor

Memo

5-1. BLOCK DIAGRAMS (1)

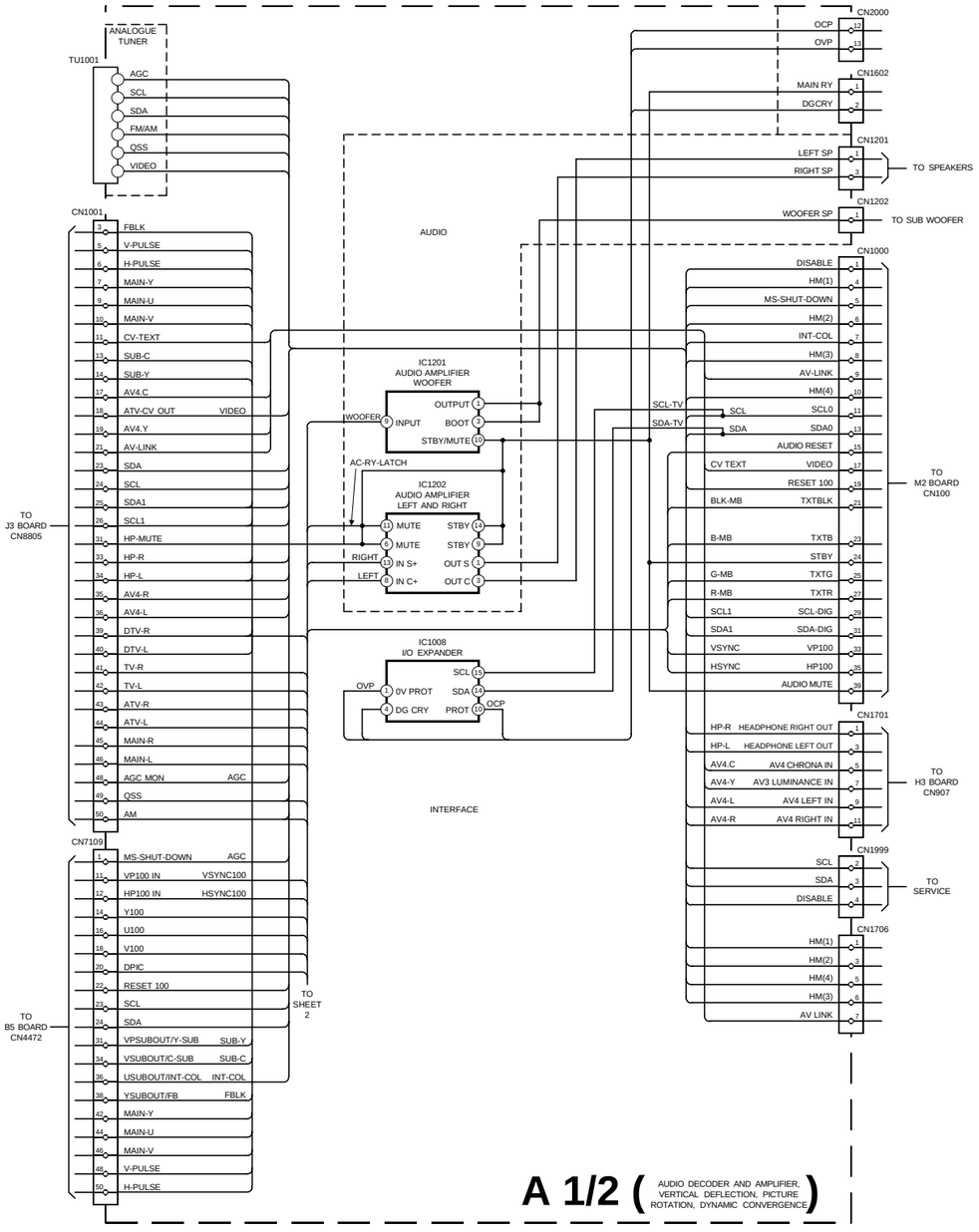

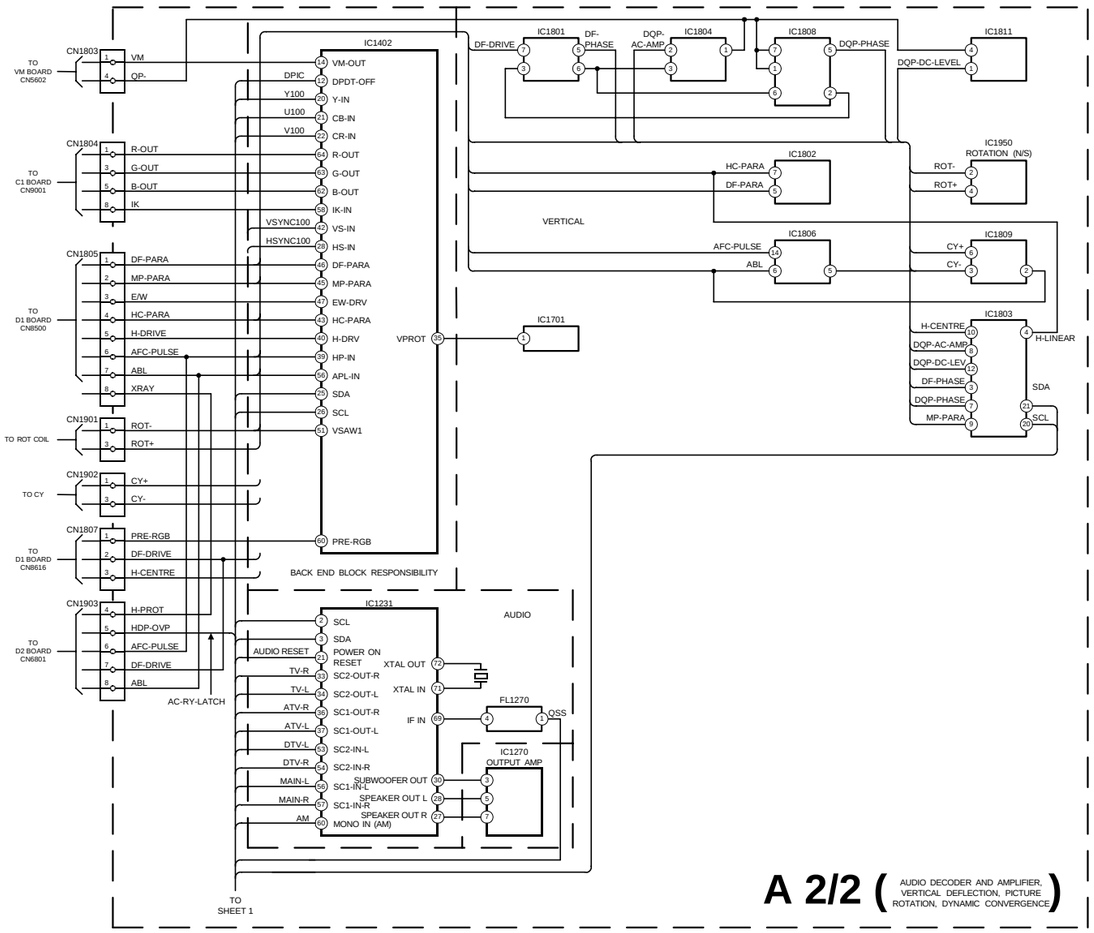

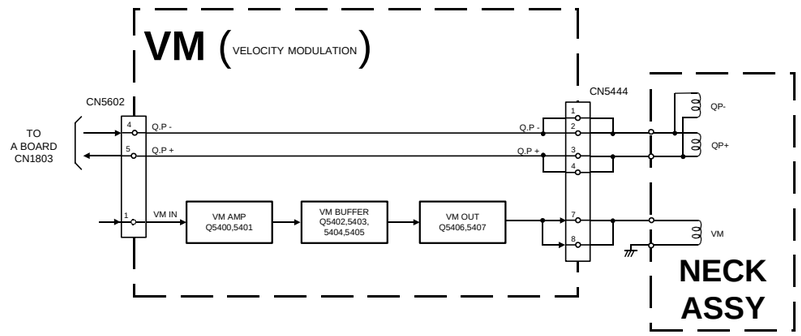

5-1. BLOCK DIAGRAMS (2)

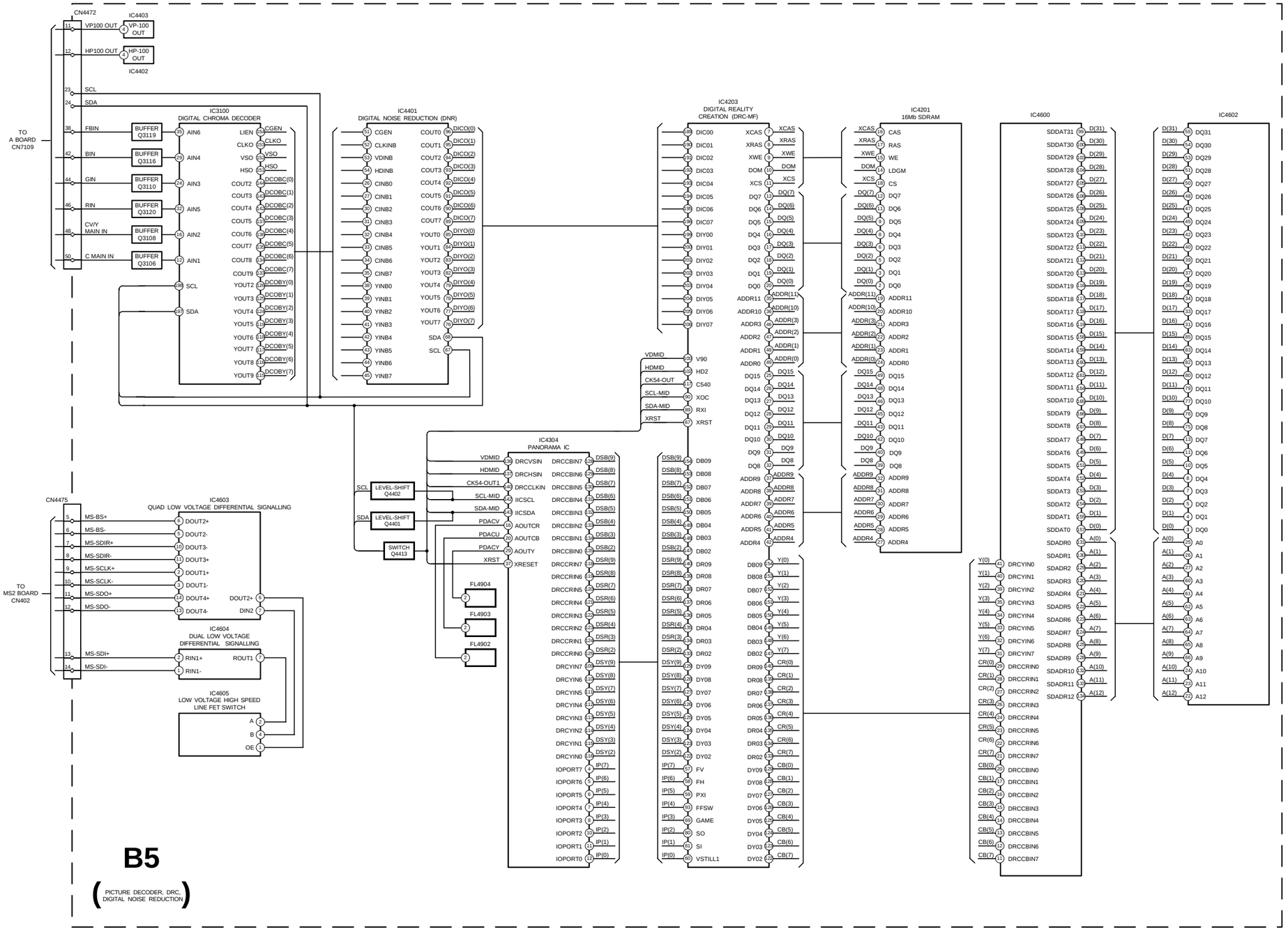

5-1. BLOCK DIAGRAMS (3)

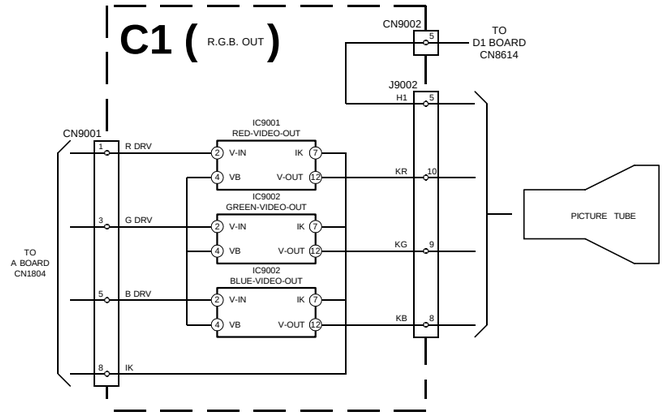

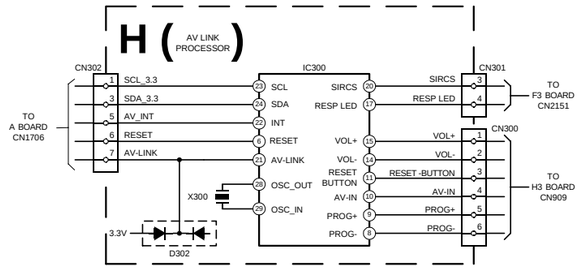

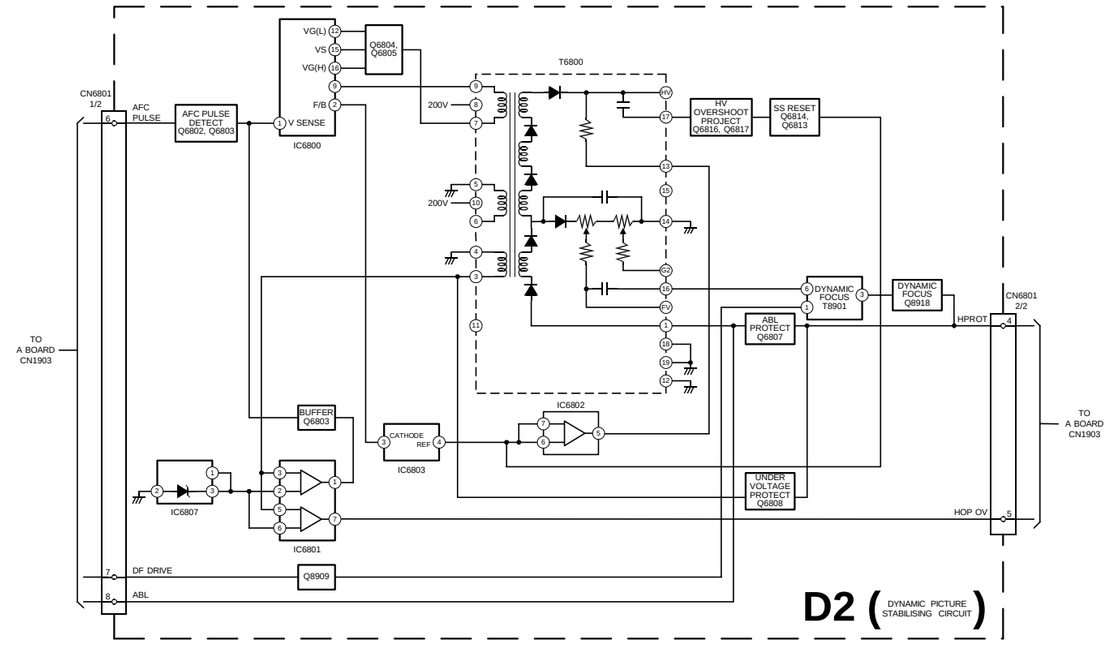

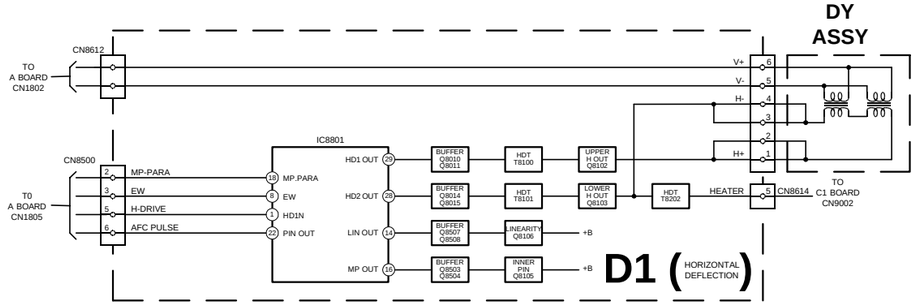

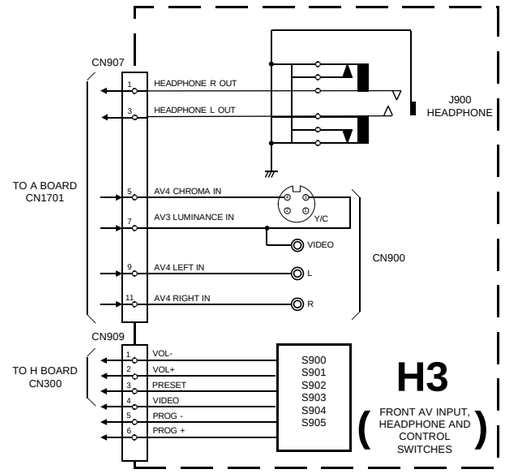

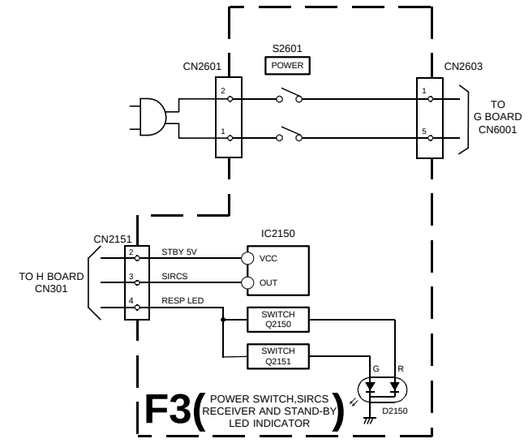

5-1. BLOCK DIAGRAMS (4)

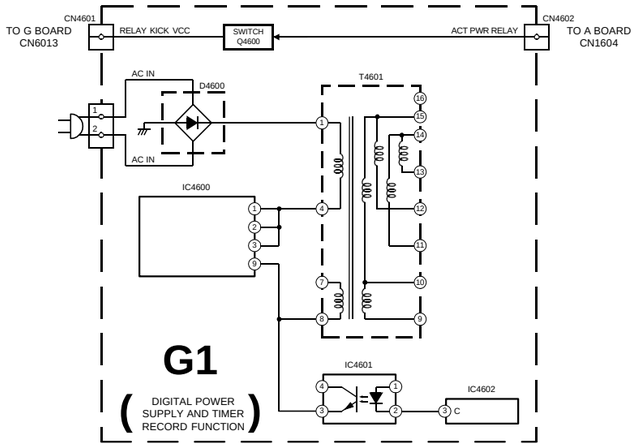

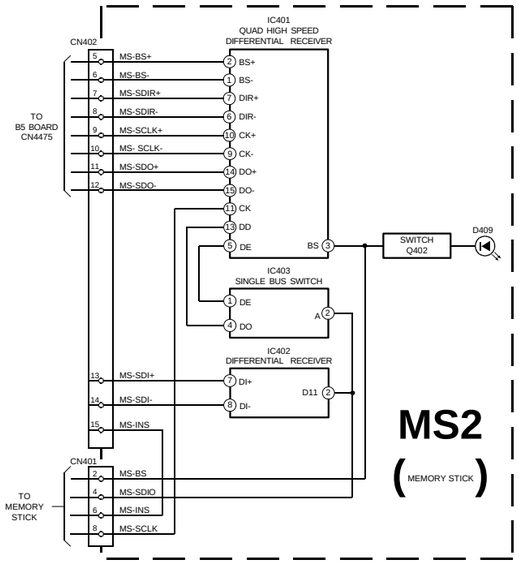

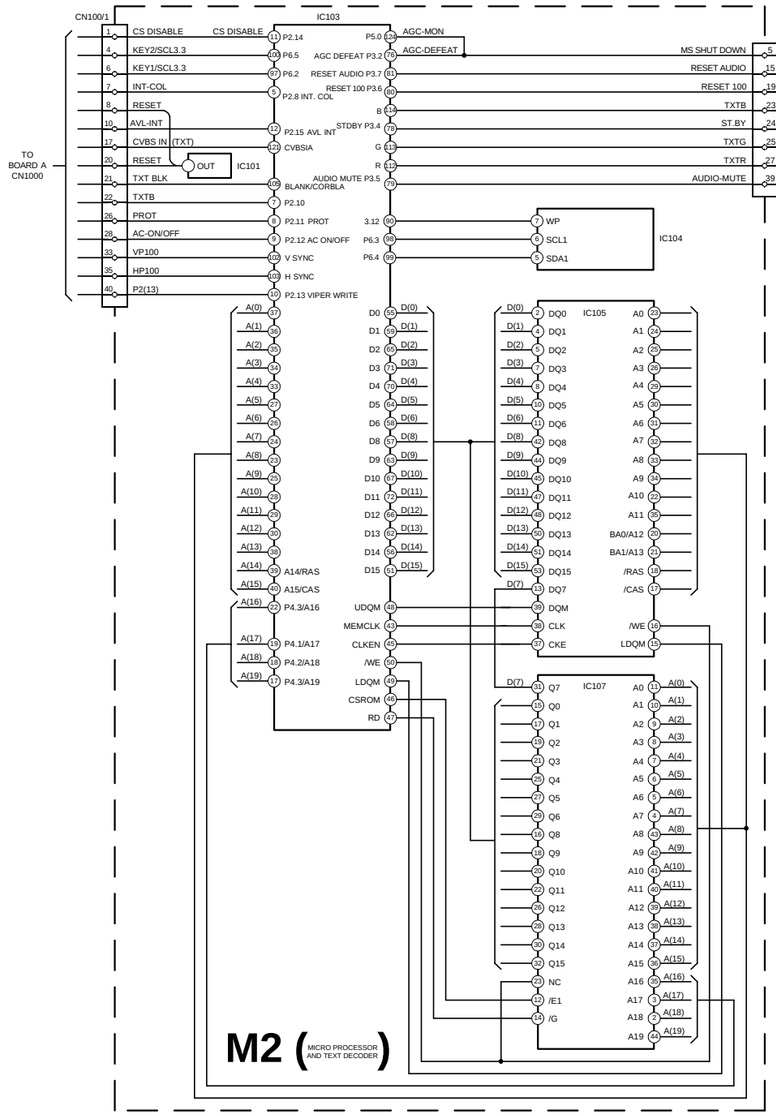

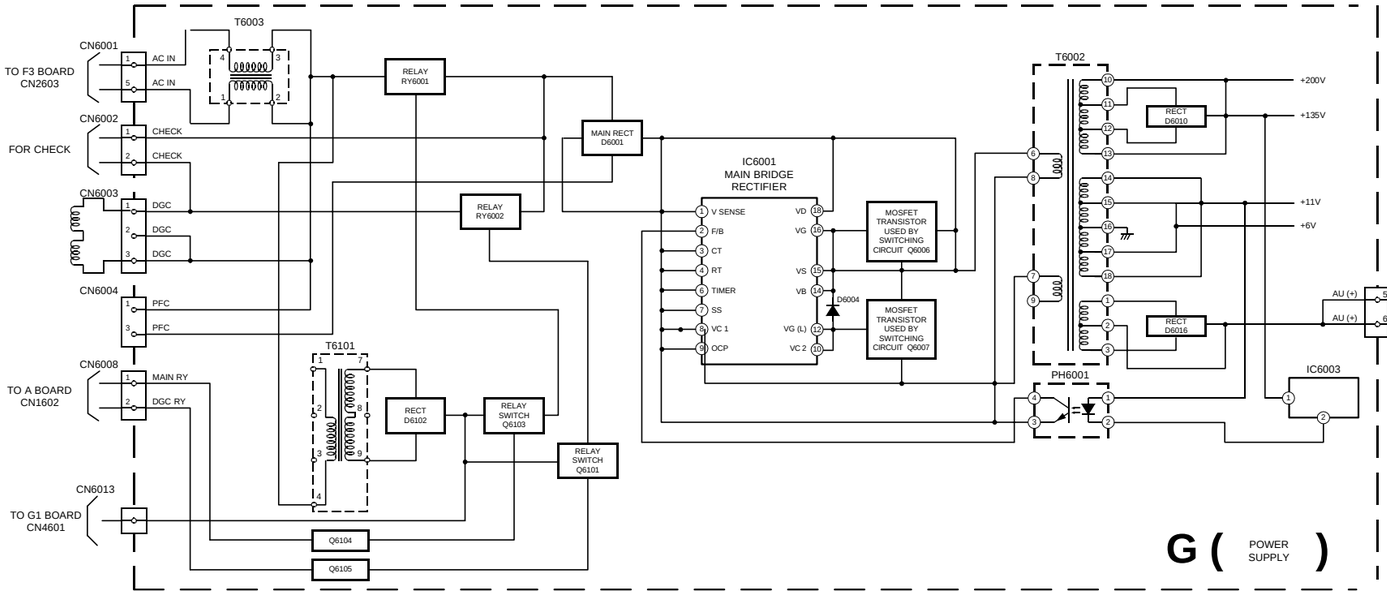

5-1. BLOCK DIAGRAMS (5)

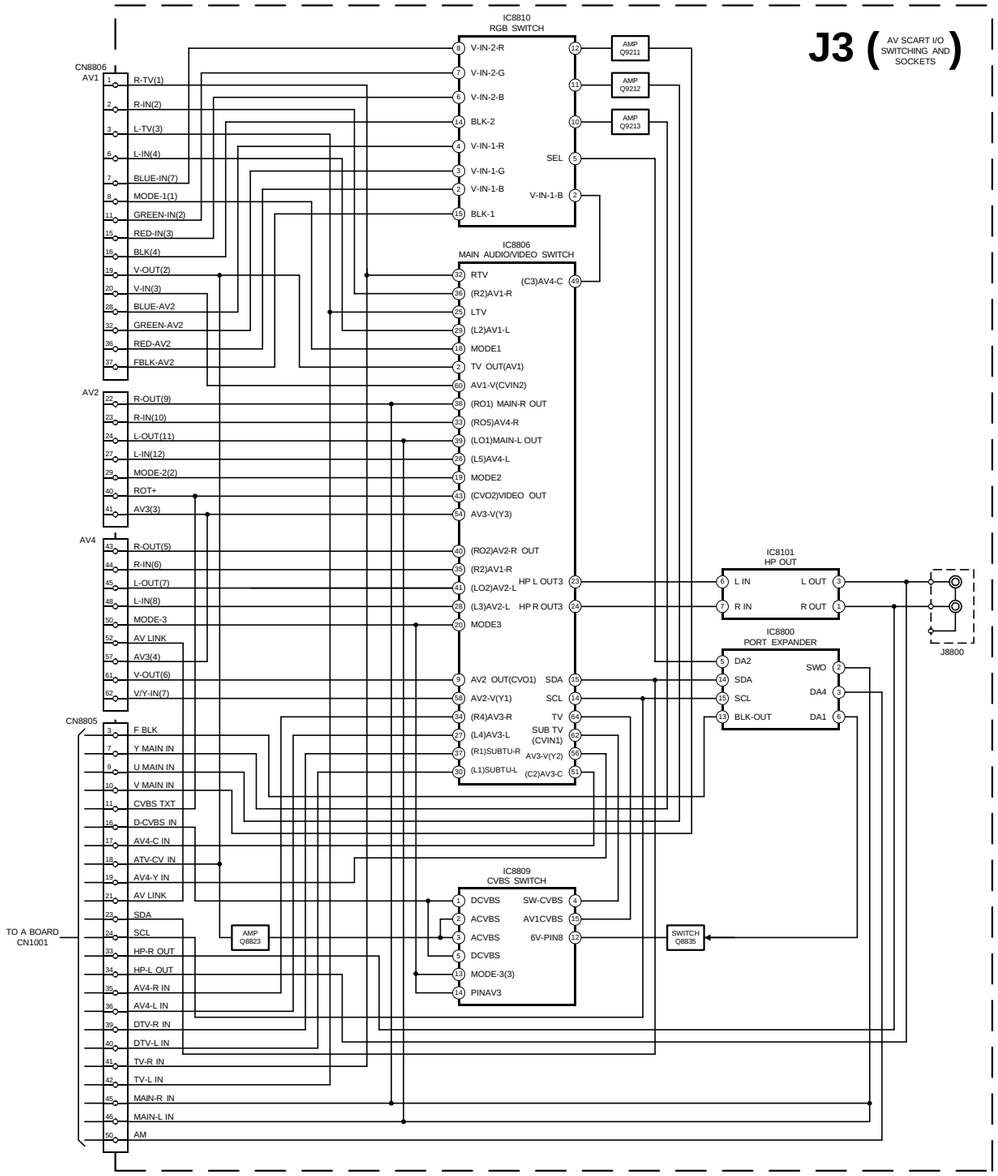

5-2. CIRCUIT BOARD LOCATION

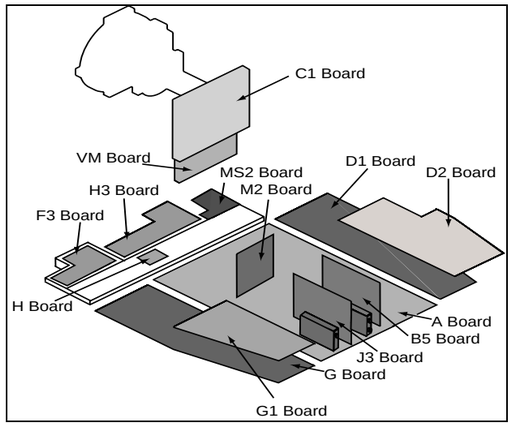

5-3. SCHEMATIC DIAGRAMS AND PRINTED WIRING BOARDS

Note :

- All capacitors are in µF unless otherwise noted.
- pF : µµF 50WV or less are not indicated except for electrolytic types.
- Indication of resistance, which does not have one for rating electrical power, is as follows.

Pitch : 5mm
Electrical power rating : 1/4W

- Chip resistors are 1/10W
- All resistors are in ohms.
  k = 1000 ohms, M = 1000,000 ohms
- : nonflammable resistor.
- : fusible resistor.
- : internal component.
- : panel designation or adjustment for repair.
- All variable and adjustable resistors have characteristic curve B, unless otherwise noted.
- All voltages are in Volts.
- Readings are taken with a 10Mohm digital mutimeter.
- Readings are taken with a color bar input signal.
- Voltage variations may be noted due to normal production tolerences.
- : B + bus.
- : B - bus.
- : RF signal path.
- : earth - ground.
- : earth - chassis.

Reference Information

RESISTOR	**RN**	: METAL FILM
	RC	: SOLID
	FPRD	: NON FLAMMABLE CARBON
	FUSE	: NON FLAMMABLE FUSIBLE
	RS	: NON FLAMMABLE METAL OXIDE
	RB	: NON FLAMMABLE CEMENT
	RW	: NON FLAMMABLE WIREWOUND
		: ADJUSTMENT RESISTOR
COIL	**LF-8L**	: MICRO INDUCTOR
CAPACITOR	**TA**	: TANTALUM
	PS	: STYROL
	PP	: POLYPROPYLENE
	PT	: MYLAR
	MPS	: METALIZED POLYESTER
	MPP	: METALIZED POLYPROPYLENE
	ALB	: BIPOLAR
	ALT	: HIGH TEMPERATURE
	ALR	: HIGH RIPPLE

Note : The components identified by shading and marked ⚠ are critical for safety. Replace only with the part numbers specified in the parts list.

Note : Les composants identifiés par une trame et par une marque ⚠ sont d'une importance critique pour la sécurité. Ne les remplacer que par des pièces de numéro spécifié. specified.

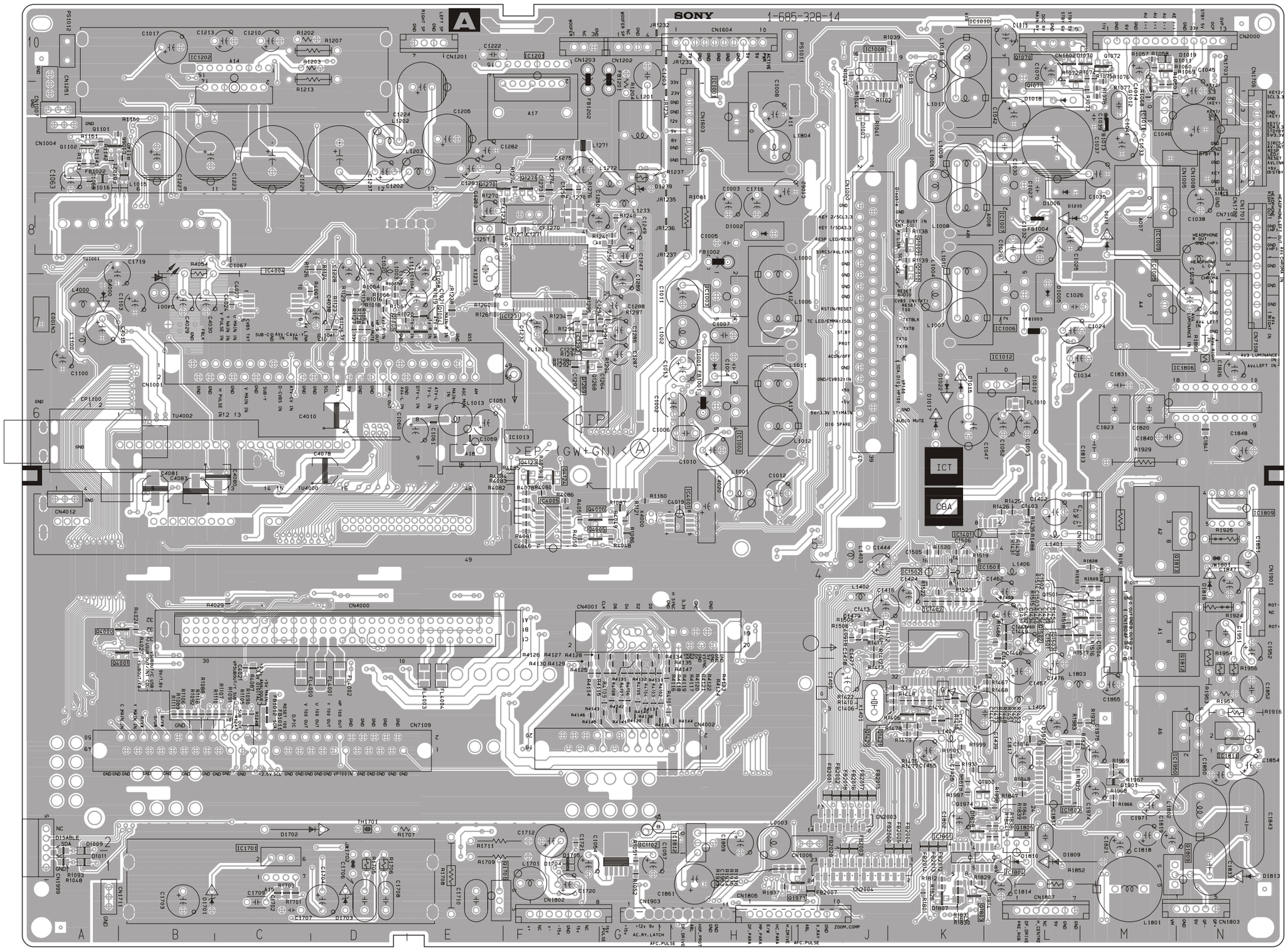

~ A Printed Wiring Board Conductor side A ~

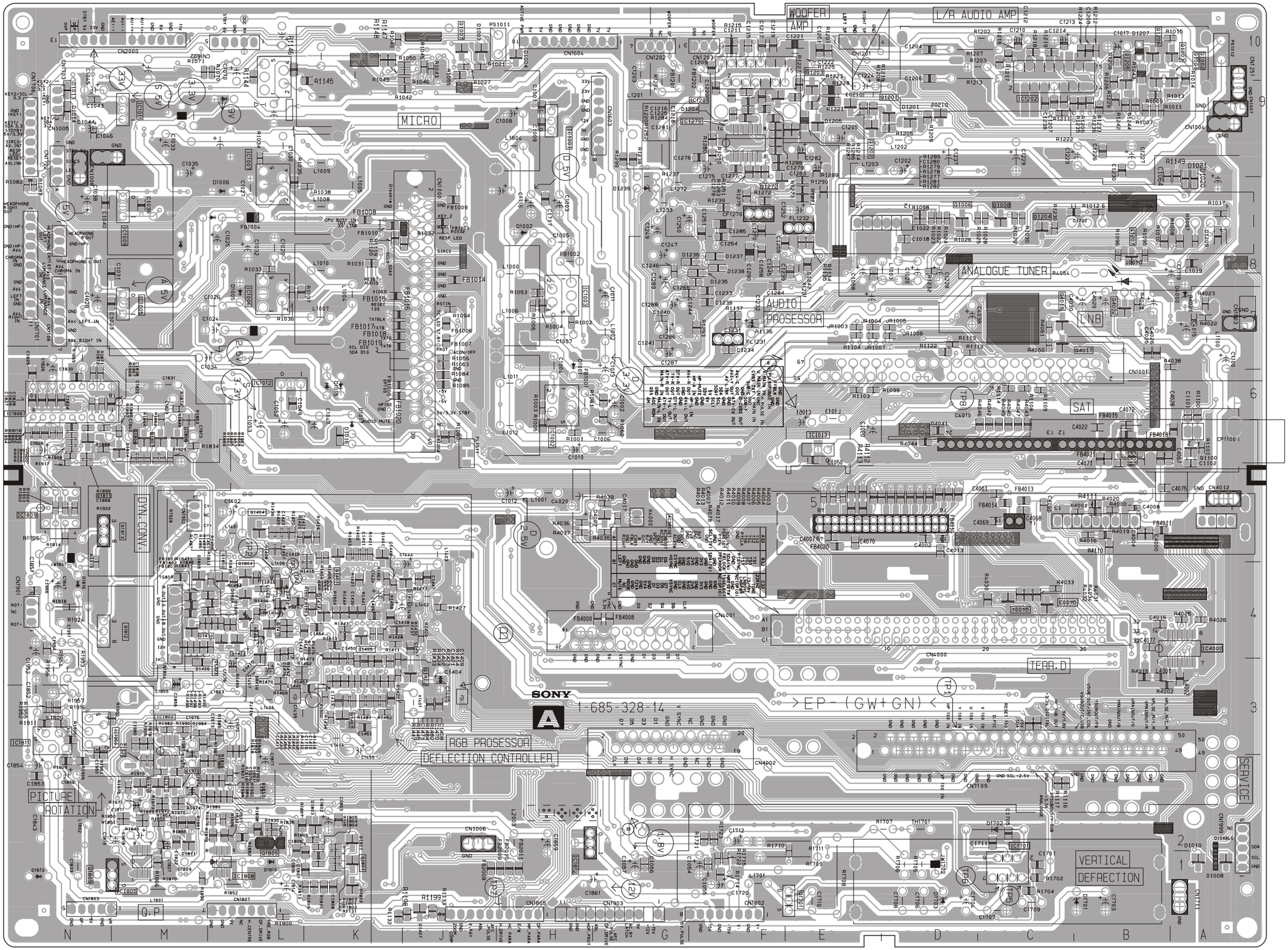

~ A Printed Wiring Board Conductor side B ~

~ A Board Location Table (A Side) ~

DIODE																							
D1006	L - 3	D1018	L - 2	D1703	E - 10	D1816	N - 7	IC1011	M - 2	IC1801	K - 10	TRANSISTOR		Q1072	M - 1	Q1812	M - 7						
D1007	J - 2	D1019	M - 1	D1704	G - 10	IC		IC1012	K - 5	IC1803	L - 9	Q1004	E - 4	Q1270	F - 3	Q1813	M - 6						
D1009	B - 9	D1070	L - 1	D1705	G - 10	IC1005	M - 4	IC1102	G - 10	IC1804	K - 10	Q1005	E - 4	Q1271	G - 3	Q1973	I - 10						
D1011	B - 10	D1210	L - 3	D1807	K - 10	IC1006	K - 4	IC1201	G - 2	IC1806	N - 5	Q1007	L - 1	Q1701	F - 10	Q1974	K - 9						
D1012	L - 5	D1211	M - 3	D1808	K - 9	IC1007	K - 3	IC1202	C - 1	IC1809	N - 6	Q1011	M - 1	Q1803	K - 10								
D1015	K - 5	D1239	H - 3	D1809	L - 10	IC1008	J - 1	IC1231	G - 4	IC1811	N - 8	Q1012	M - 2	Q1805	L - 10								
D1017	K - 5	D1701	C - 10	D1810	L - 10	IC1009	M - 3	IC1402	K - 7	IC1812	H - 10	Q1070	L - 1	Q1809	M - 10								
		D1702	D - 9	D1813	N - 10	IC1010	K - 2	IC1701	D - 10	IC1950	M - 9	Q1071	L - 2	Q1811	M - 6								

~ A Board Location Table (B Side) ~

DIODE																							
D1003	F - 1	D1014	B - 2	D1206	M - 1	D1801	E - 9	D1814	B - 5	Q1002	M - 2	Q1203	J - 2	Q1407	E - 8	Q1804	D - 7						
D1004	G - 1	D1016	E - 5	D1207	M - 1	D1802	E - 10	IC		Q1003	M - 1	Q1204	L - 3	Q1410	C - 7	Q1806	C - 5						
D1005	D - 4	D1201	K - 2	D1209	N - 3	D1803	D - 9	IC1270	I - 2	Q1006	K - 3	Q1205	M - 1	Q1413	D - 7	Q1807	C - 5						
D1008	N - 10	D1202	K - 2	D1235	H - 4	D1804	D - 7	IC1802	C - 8	Q1008	L - 3	Q1207	M - 4	Q1422	D - 7	Q1808	C - 5						
D1010	N - 10	D1203	J - 2	D1236	H - 4	D1805	C - 7	IC1808	C - 10	Q1100	N - 5	Q1272	I - 3	Q1423	C - 7	Q1970	C - 9						
D1013	B - 2	D1204	I - 2	D1403	D - 7	D1806	D - 7	TRANSISTOR		Q1201	J - 2	Q1402	E - 8	Q1801	E - 10	Q1971	C - 9						
		D1205	J - 2	D1406	C - 8	D1811	C - 9	Q1001	M - 2	Q1202	J - 2	Q1406	E - 7	Q1802	C - 7	Q1972	C - 9						

~ A Board Semiconductor Voltages ~

Ref	(s)	(g)	(d)	Ref	(e)	(b)	(c)	Ref	(e)	(b)	(c)	Ref	(e)	(b)	(c)
Q1701	-0.3	11.6	-0.3	Q1008	8.8	8.2	4.5	Q1207	0	0.4	4.2	Q1422	3.5	4.2	0
Q1809	0	4.8	25.7	Q1011	0	0.7	0	Q1270	1.2	1.8	4.9	Q1423	3.5	2.2	8.9
Ref	**(e)**	**(b)**	**(c)**	Q1072	0	0	3.2	Q1271	1.8	2.4	4.9	Q1801	0	0.5	2.0
Q1001	0	0	4.9	Q1100	0	4.6	0	Q1272	4.9	5.5	8.8	Q1803	0	0.4	2.0
Q1002	0	0	4.9	Q1201	12.2	12.6	0	Q1402	5.0	5.7	8.9	Q1804	0	0.1	4.6
Q1003	4.9	4.9	0	Q1202	0	0	4.2	Q1406	3.1	2.4	0	Q1805	12.0	11.6	5.7
Q1004	1.3	2.0	4.3	Q1203	0	0	4.2	Q1407	3.5	2.8	0	Q1806	1.9	1.3	0
Q1005	4.9	4.3	2.1	Q1204	0	0	4.2	Q1410	3.5	8.0	0	Q1807	2.8	3.4	7.8
Q1006	2.6	3.2	8.2	Q1205	0	0.6	0	Q1413	3.6	3.0	0	Q1808	2.7	3.3	7.8

~ A Board Waveforms ~

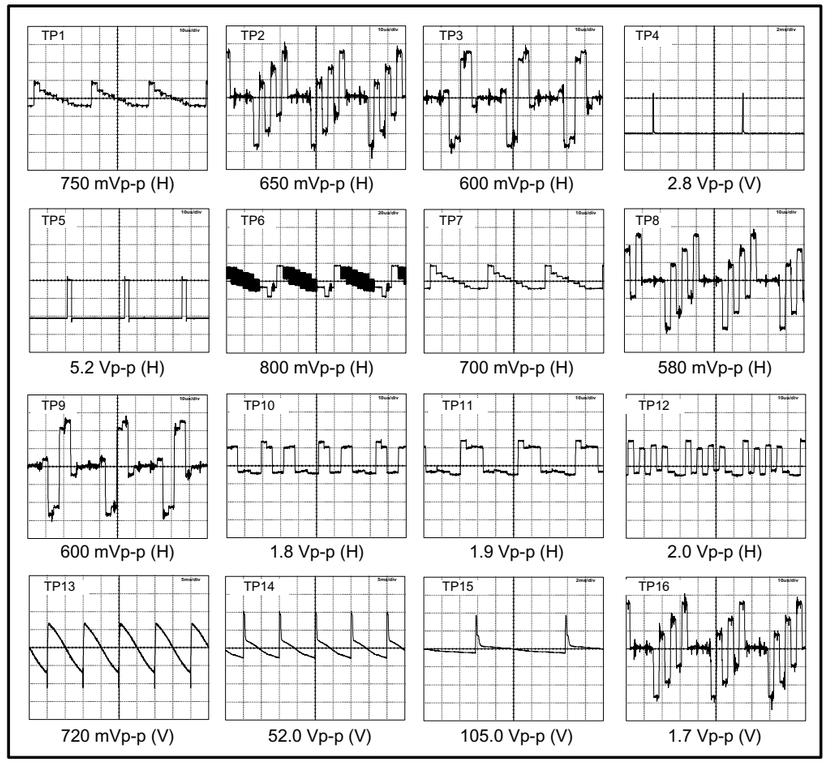

~ A Board IC Voltages ~

Ref No	Pin No	Volts (V)	Ref No	Pin No	Volts (V)	Ref No	Pin No	Volts (V)	Ref No	Pin No	Volts (V)	Ref No	Pin No	Volts (V)	Ref No	Pin No	Volts (V)	Ref No	Pin No	Volts (V)	Ref No	Pin No	Volts (V	Ref No	Pin No	Volts (V
IC1201	1	0	IC1202	8	0	IC1102	5	13.7	IC1402	17	2.6	IC1402	41	0	IC1402	63	2.9	IC1803	21	4.8	IC1802	3	1.1	IC1270	9	4.8	IC1806	17	4.8
	2	-4.3		9	0	IC7002	1	7.0		18	1.1		42	0		64	2.7		22	4.9		4	0		10	4.8		18	0
	3	10.0		10	0		2	2.6		19	4.9		43	3.3	IC1803	1	1.9		23	0		5	1.5		11	0	IC1809	1	9.2
	4	0		11	0.3		3	0		20	3.5		44	0		2	1.1		24	0		6	1.5		12	0.9		2	3.6
	5	0		12	0		4	1.3		21	3.4		45	4.2		3	3.6	IC1801	1	4.4		7	2.6		13	0.8		3	3.6
	6	-13.3		13	0		5	6.4		22	3.4		46	3.5		4	2.3		2	5.8		8	8.9		14	7.6		4	-14.2
	7	0		14	0	IC1402	1	0		23	5.0		47	3.8		5	4.2		3	6.2	IC1808	1	4.8	IC1806	1	4.8		5	9.2
	8	-15.3		15	15.2		2	0		24	0		48	4.4		6	4.2		4	0		2	2.0		2	4.8		6	-1.2
	9	0	IC1007	1	7.1		3	0		25	4.8		49	5.2		7	2.4		5	4.4		3	1.6		3	4.8		7	12.0
	10	4.2		2	0		4	3.1		26	4.8		50	3.4		8	2.6		6	4.3		4	0		4	4.8		8	-12.9
	11	15.2		3	5.8		5	3.1	IC1402	27	0.9	IC1402	51	4.1		9	2.6		7	0.4		5	5.1		5	4.9	IC1701	1	1.2
	12	-4.3		4	6.3		6	3.1		28	0.3		52	3.4	IC1803	10	1.5		8	12.0		6	4.3		6	4.9		2	14.8
	13	15.2		5	0		7	0		29	5.0		53	3.4		11	2.2	IC1804	1	6.3		7	4.8		7	4.9		3	-11.4
	14	-15.3	IC1010	1	12.6	IC1402	8	3.6		30	5.7		54	0.6		12	2.4		2	4.3		8	8.9	IC1806	8	4.9		4	-14.2
	15	-15.3		2	5.0		9	3.6		31	1.3		55	8.9		13	4.9		3	4.3	IC1270	1	4.9		9	5.2		5	0
IC1202	1	0		3	0		10	3.6		32	3.1		56	4.3		14	0		4	0		2	4.8		10	12.0		6	15.3
	2	15.2		4	1.3		11	0		34	0		57	4.9		15	4.9		5	3.4		3	4.8		11	4.1		7	1.2
	3	0		5	6.8		12	0.9		35	0.9		58	3.7		16	4.9		6	3.5		4	8.8		12	4.9	IC1811	1	2.0
	4	-15.3	IC1102	1	13.2		13	0		37	0		59	1.5		17	4.9		7	0		5	4.8		13	4.9		2	2.0
	5	0		2	-12.5		14	2.4		38	2.3		60	1.5		18	0		8	8.9		6	4.8		14	1.9		3	-14.2
	6	0.3		3	-15.4		15	4.9		39	2.1		61	8.9		19	0	IC1802	1	5.4		7	4.9		15	1.1		4	1.0
	7	0		4	-0.4		16	2.6		40	2.8		62	2.9		20	4.8		2	1.1		8	4.9		16	4.8		5	8.9

A..-36NX200U

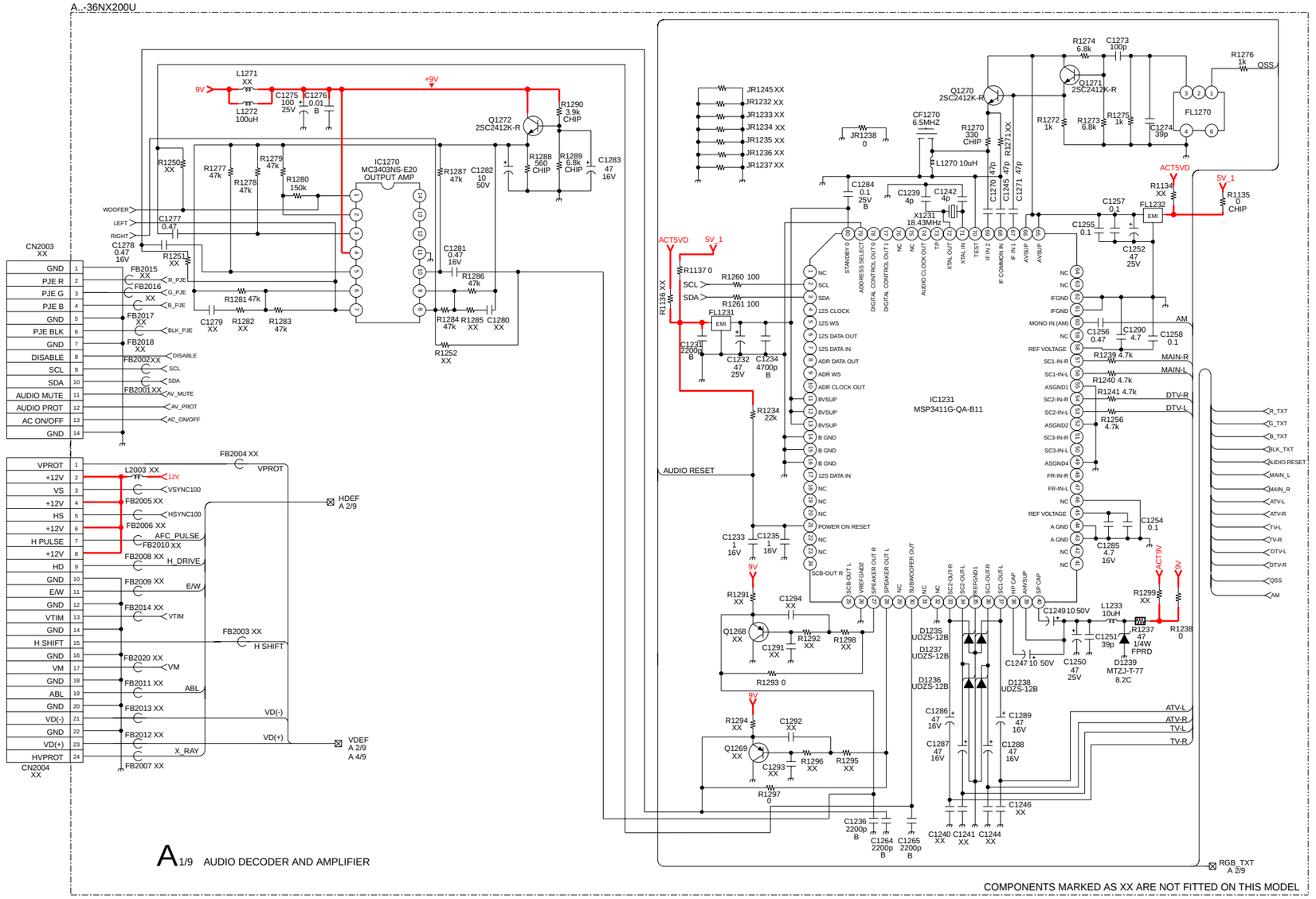

~ A Board Schematic Diagram [Audio Decoder and Amplifier] Page 1/9 ~

A..-36NX200U

A 2/9 BACKEND

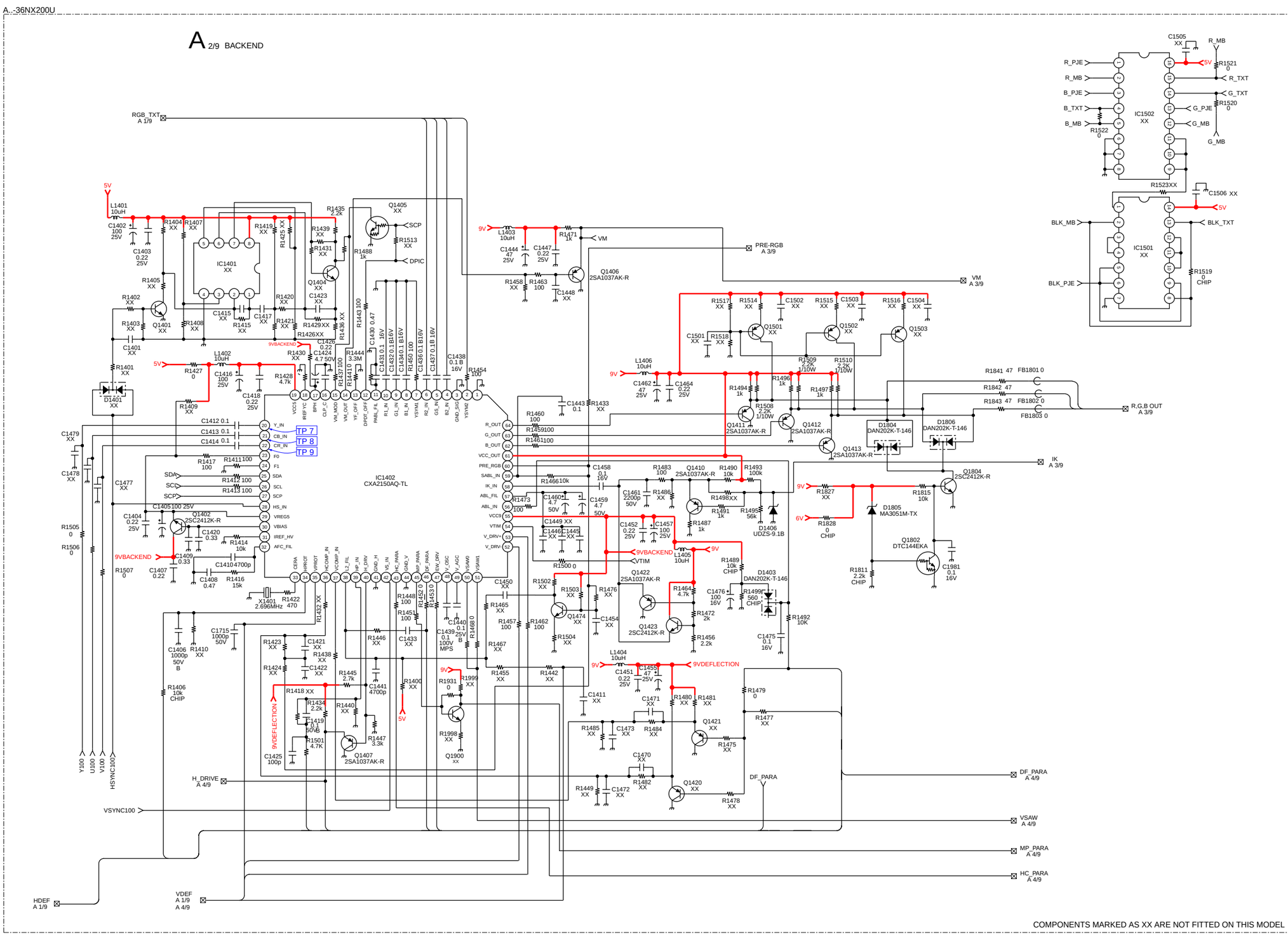

COMPONENTS MARKED AS XX ARE NOT FITTED ON THIS MODEL

~ A Board Schematic Diagram [Backend] Page 2/9 ~

A..-36NX200U

COMPONENTS MARKED AS XX ARE NOT FITTED ON THIS MODEL

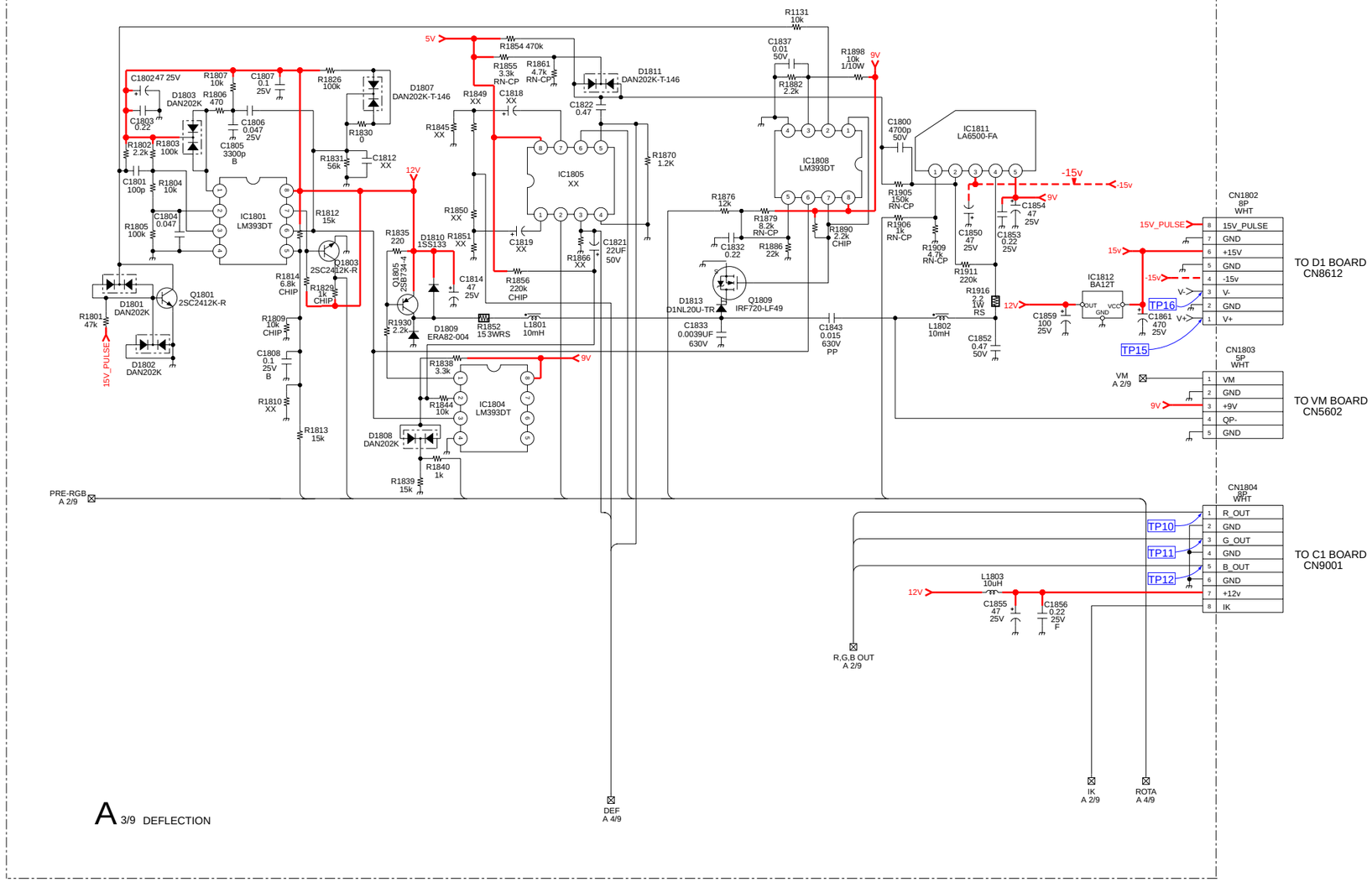

~ A Board Schematic Diagram [Deflection] Page 3/9 ~

A_-36NX200U

A 4/9 DEFLECTION, PICTURE ROTATION

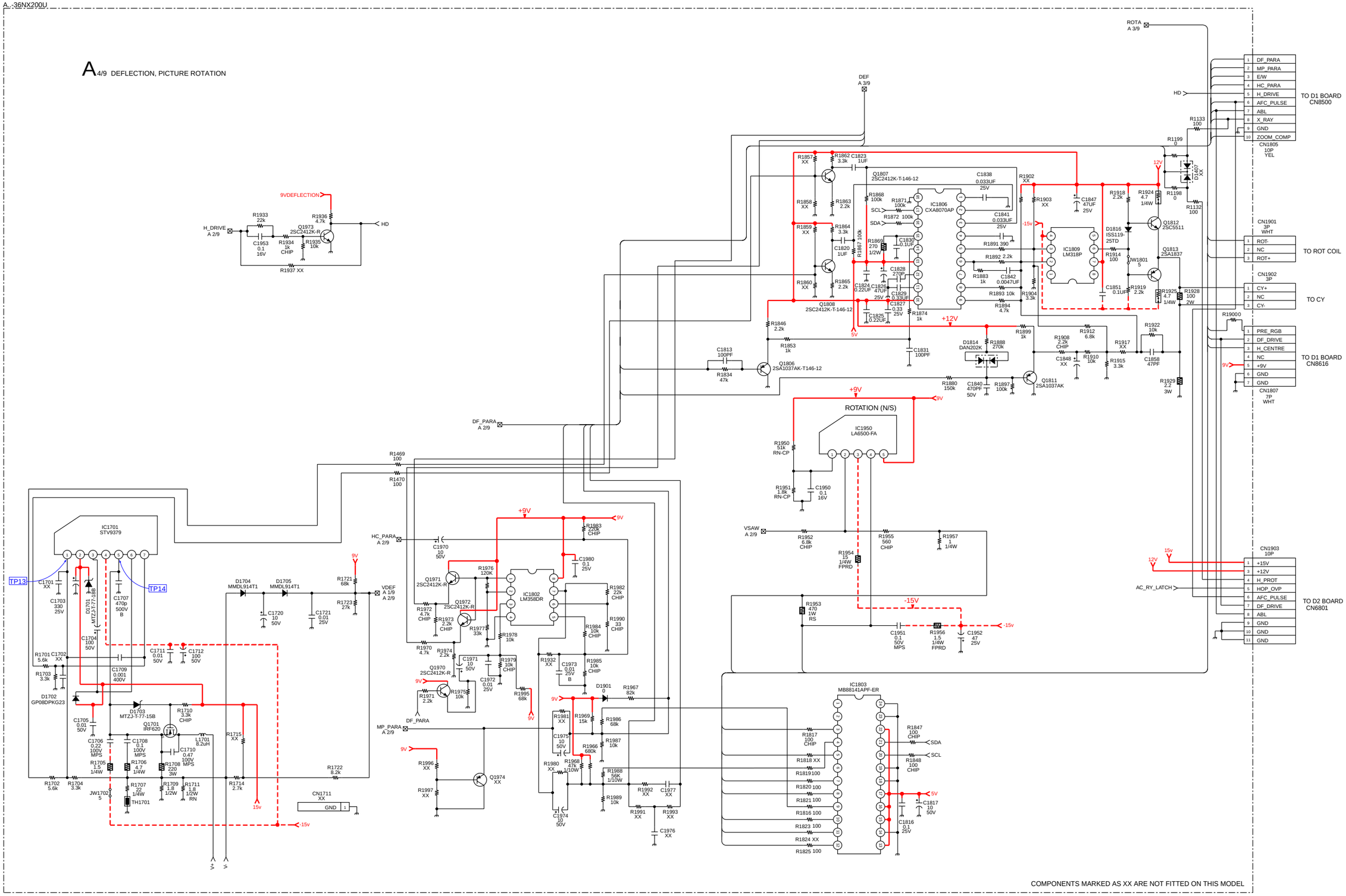

COMPONENTS MARKED AS XX ARE NOT FITTED ON THIS MODEL

~ A Board Schematic Diagram [Deflection, Picture Rotation] Page 4/9 ~

A.-36NX200U

A 5/9 INTERFACE

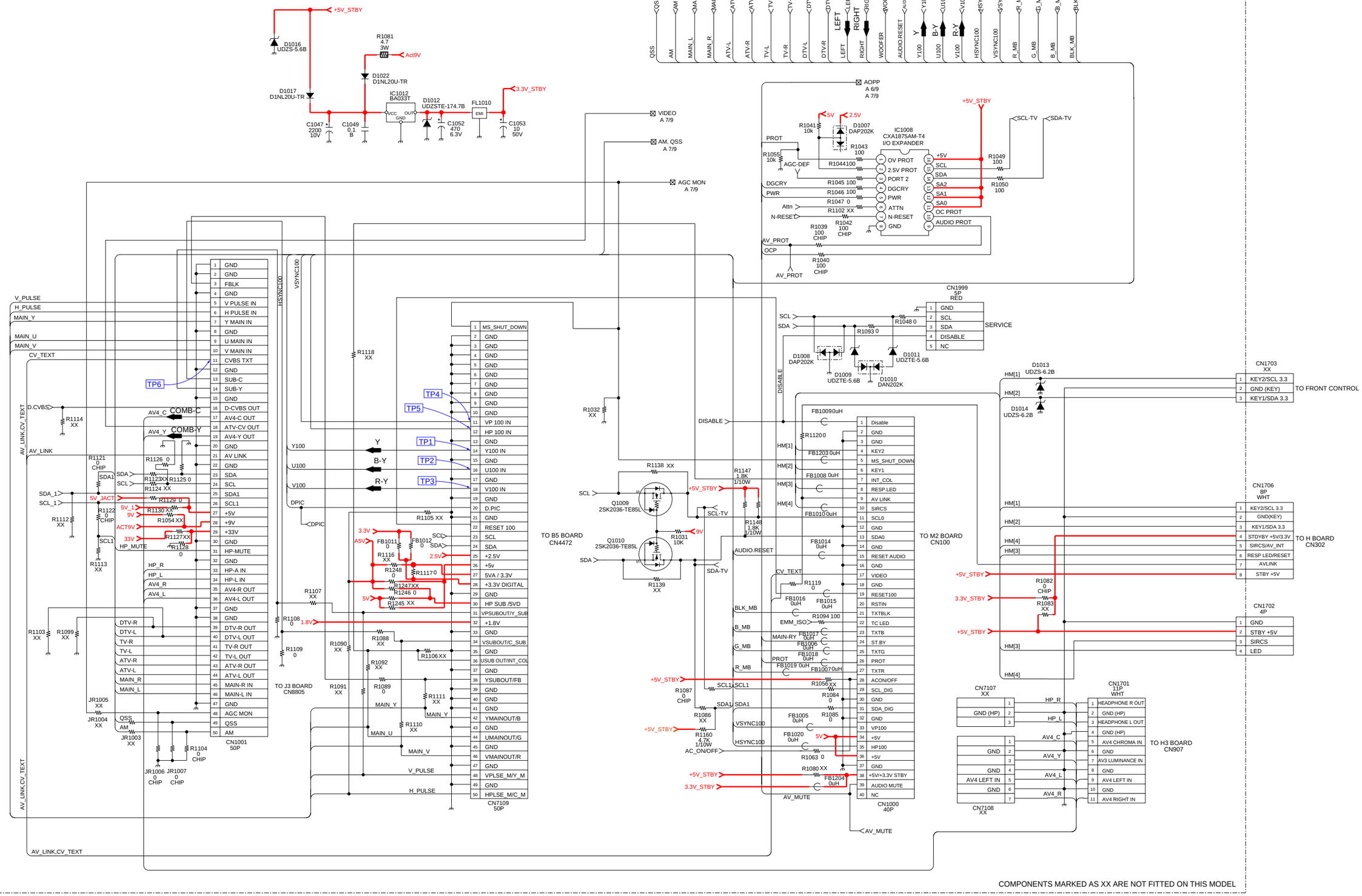

~ A Board Schematic Diagram [Interface] Page 5/9 ~

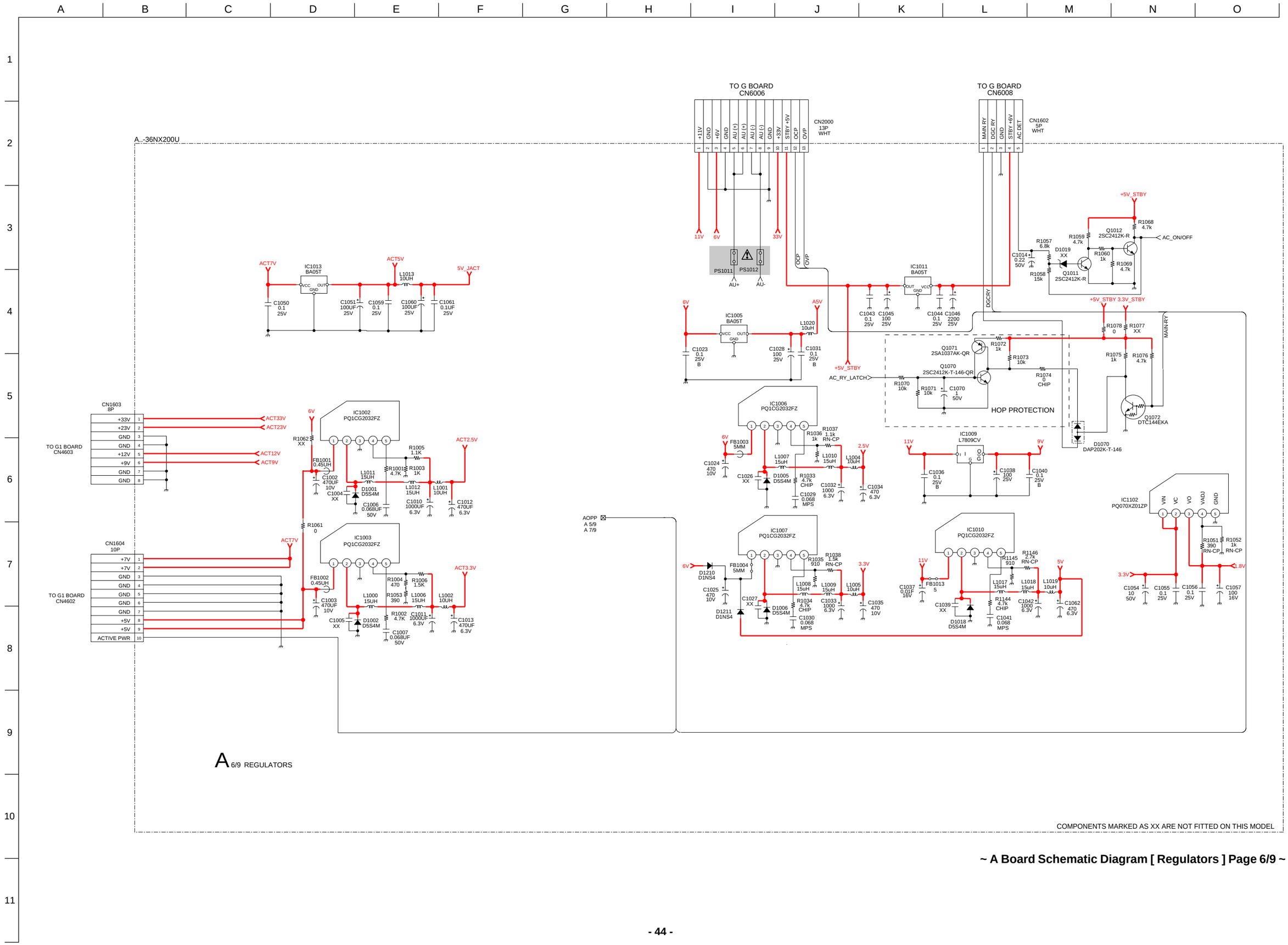

~ A Board Schematic Diagram [Regulators] Page 6/9 ~

A..-36NX200U

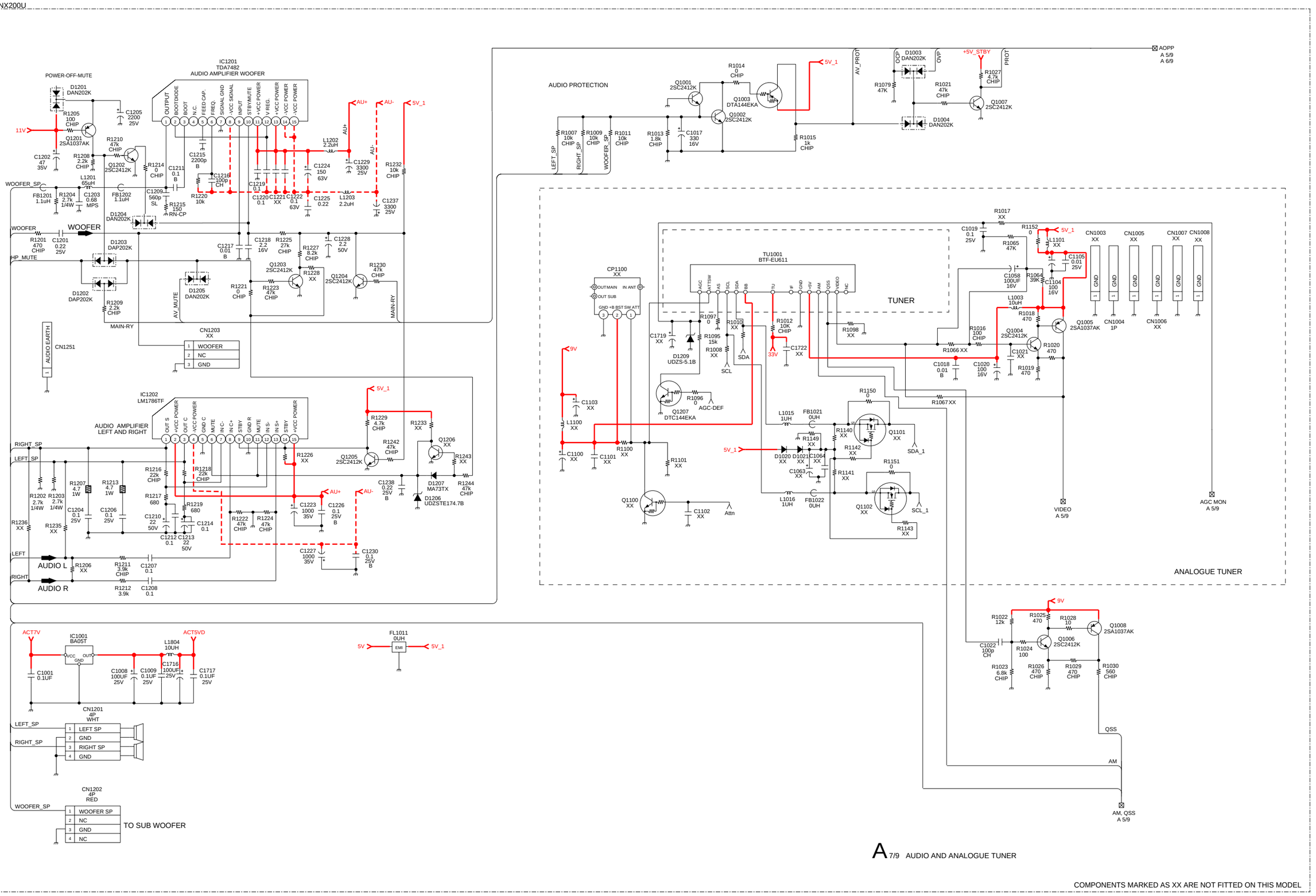
POWER-OFF-MUTE
IC1201
TDA7482
AUDIO AMPLIFIER WOOFER
OUTPUT
BOOTDIODE
BOOT
N.C.
FEED CAP.
FREQ.
SIGNAL GND
VCC SIGNAL
INPUT
STBY/MUTE
+VCC POWER
V REG.
+VCC POWER
VCC POWER
VCC POWER
11V
5V_1
AU+
AU-
WOOFER_SP
WOOFER
HP_MUTE
AV_MUTE
MAIN-RY
CN1251
AUDIO EARTH
CN1203
XX
WOOFER
NC
GND
IC1202
LM1786TF
AUDIO AMPLIFIER
LEFT AND RIGHT
RIGHT_SP
LEFT_SP
LEFT
AUDIO L
RIGHT
AUDIO R
ACT7V
ACT5VD
IC1001
BA05T
CN1201
4P
WHT
CN1202
4P
RED
TO SUB WOOFER
FL1011
0UH
EMI
5V
AUDIO PROTECTION
LEFT_SP
RIGHT_SP
WOOFER_SP
AV_PROT
OCP
OVP
PROT
+5V_STBY
AOPP
A 5/9
A 6/9
TUNER
TU1001
BTF-EU611
CP1100
XX
OUT MAIN
IN ANT
OUT SUB
GND +B BST SW ATT
AGC
ATTSW
AS
SCL
SDA
BB
TU
IF
GND
5V
AM
VSS
VIDEO
NC
9V
33V
SDA
SCL
AGC-DEF
SDA_1
SCL_1
Attn
VIDEO
A 5/9
AGC MON
A 5/9
AM, QSS
A 5/9
QSS
AM
ANALOGUE TUNER
A 7/9 AUDIO AND ANALOGUE TUNER
COMPONENTS MARKED AS XX ARE NOT FITTED ON THIS MODEL

A..-36NX200U

TO N BOARD
CN3501

CN4000
96P

22K-TONE TS1 TS0 13_18V TS3 TS2 LNBOVL TS5 TS4 LNBPWR TS7 TS6 PTSYNC PTCLK SDA-N3V SCL-N3V FELOCK FE-RESET TPERROR PTEN

ACT3.3V
C4021
0.22
16V
N-RESET

R4087
XX

FL4000 FL4001 FL4002 FL4003 FL4004

ACT3.3V ACT2.5V ACT5VD ACT5V ACT12V

CLK
D.CVBS

AC3-CLK AC3-SW VSYNC HSYNC AC3-RESET D7 D6 AC3-BOOT D5 D4 AC3-INT D3 D2 D1 D0 SPDIF

MUTE DTV-L DTV-R

CLK
D7 D6 D5 D4 D3 D2 D1 D0
VSYNC HSYNC

CN4001
XX

1 CLK
2 D7
3 D6
4 D5
5 D4
6 D3
7 D2
8 D1
9 D0
10 GND
11 GND
12 V_SYNC
13 H_SYNC
14 A5V
15 3.3V
16 GND
17 GND
18 GND
19 GND
20 GND

A5V
3.3V
FB4008 1/16W
FB4000 1/16W

R4125 XX
R4126 XX
R4135 XX

DTV-R DTV-L

R4144 XX
R4124 0
R4136 XX
R4101 0

D[7] D[6] R4102 0 D[5] R4103 0 D[4] R4104 0 D[3] R4105 0 D[2] R4106 0 D[1] R4107 0 D[0] R4108 0
R4109 0

R4137 XX
R4138 XX
R4139 XX
R4140 XX
R4141 XX
R4142 XX
R4143 XX

R4145 XX
R4146 XX

V_SYNC
H_SYNC

CN4002
20P

1 CLK
2 D7
3 D6
4 D5
5 D4
6 D3
7 D2
8 D1
9 D0
10 GND
11 GND
12 V SYNC
13 H SYNC
14 NC
15 NC
16 GND
17 GND
18 GND
19 GND
20 GND

TO B5 BOARD
CN4473

SCL-N5V SDA-N5V
R4029 4.7k CHIP
R4030 4.7k CHIP
R4031 10k CHIP
R4032 10k CHIP
R4033 XX
R4034 XX
Q4003 2SK2036
Q4004 2SK2036
ACT3.3V
ACT5VD

TUNER
A 9/9

D4002
DAN202K-T-146
R4039 100 CHIP
+5V_STBY
C4017 0.22 16V
R4035 4.7K CHIP
C4019 20p 50V
Q4005 2SK2036
R4048 10k CHIP
IC4001
PCF8593/T118
XTAL VDD #INT #RESET SCL VSS SDA
C4020 1000000 5.5V
X4000
XTAL
32.768MHz
R4036 100 CHIP
R4037 100 CHIP
SCL-TV
SDA-TV
R4050 4.7K CHIP
R4051 4.7K CHIP
R4049 10K CHIP
Q4006 2SK2036
R4086 0 CHIP

IC4005
TC74HC4066AF(EL)
VCC
N-SDA(TV)
CONTROLsw 3.3v-SDA
N-SCL(TV)
3.3V-SCL
CONTROLsw
PH
GND
C4046 0.1 25V
R4081 0
R4082 0
R4083 0
R4084 0
R4085 0
R4078 XX
R4080 0 CHIP
R4079 10k 1/10W CHIP
Q4123 XX
Q4124 DTC144EKA
EMM_ISO

A 8/9 DIGITAL INTERFACE

COMPONENTS MARKED AS XX ARE NOT FITTED ON THIS MODEL

~ A Schematic [Audio Decoder and Amplifier, Vertical Deflection, Picture Rotation, Dynamic Convergence] Page 8/9 ~

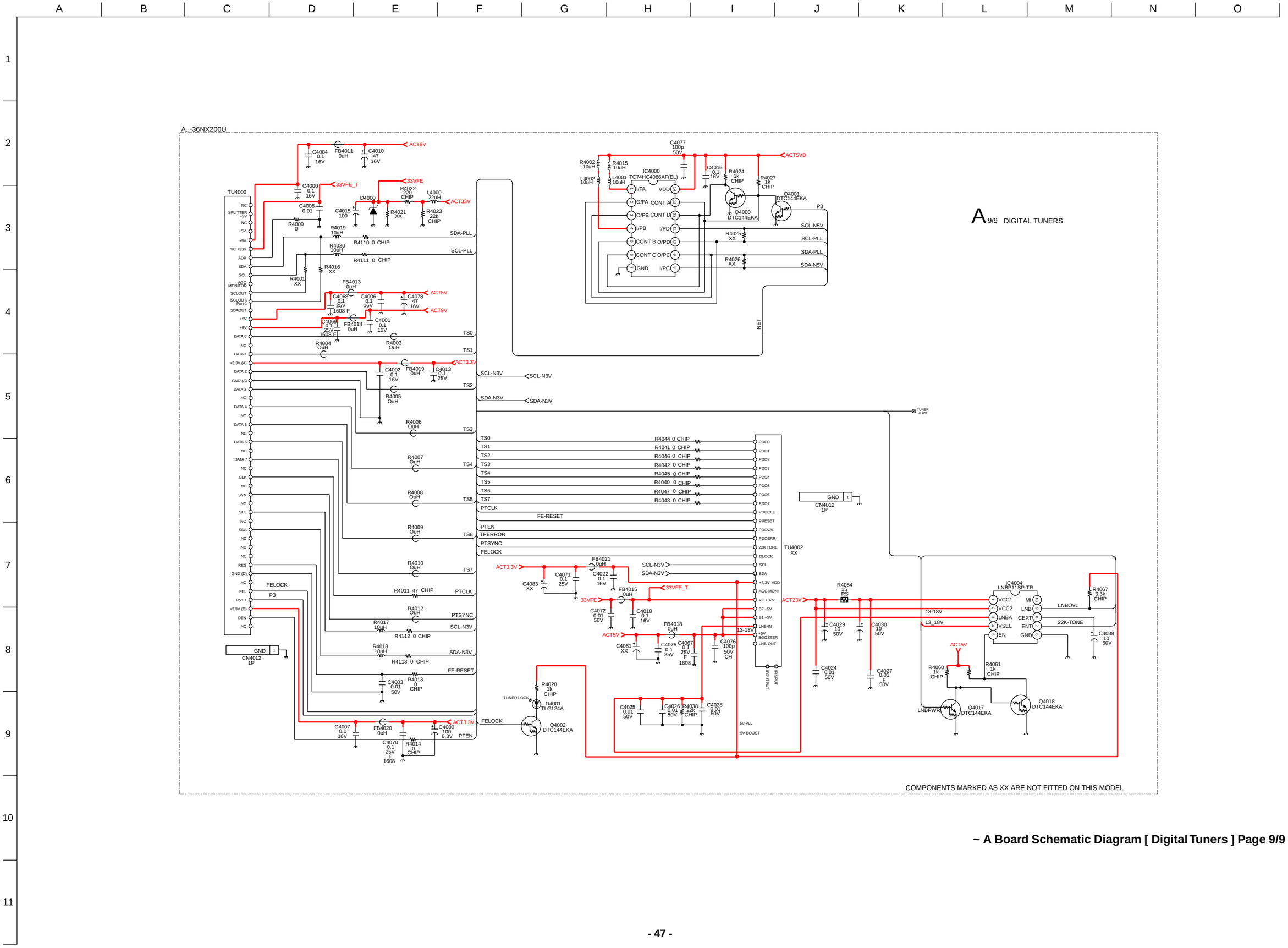

~ A Board Schematic Diagram [Digital Tuners] Page 9/9 ~

~ B5 Printed Wiring Board Conductor side A ~

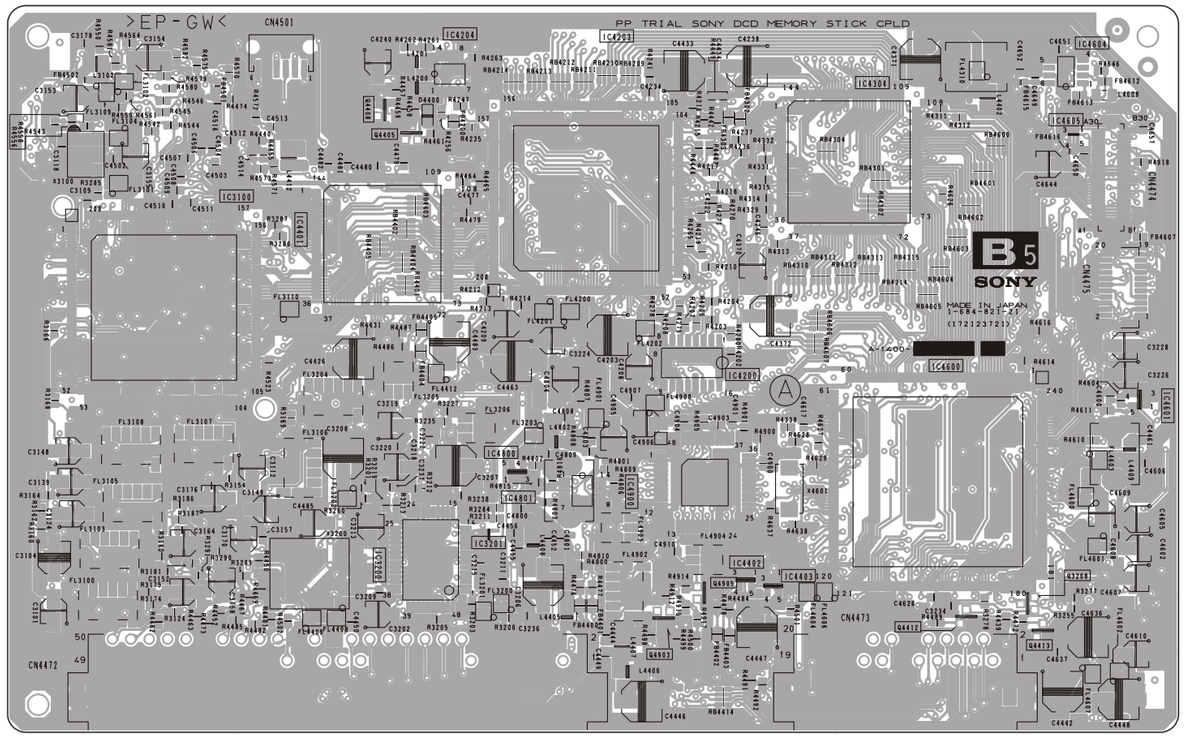

~ B5 Location Table A Side ~

DIODE		IC3201	E - 5	IC4403	G - 5	TRANSISTOR		Q4903	F - 5
D4400	E - 2	IC4200	F - 3	IC4600	H - 4	Q3208	I - 5	Q4905	G - 5
IC		IC4203	F - 2	IC4800	E - 4	Q4405	E - 2		
IC3100	C - 3	IC4401	D - 3	IC4801	E - 4	Q4408	D - 2		
IC3200	D - 5	IC4402	G - 5	IC4900	F - 4	Q4413	I - 5		

~ B5 Printed Wiring Board Conductor side B ~

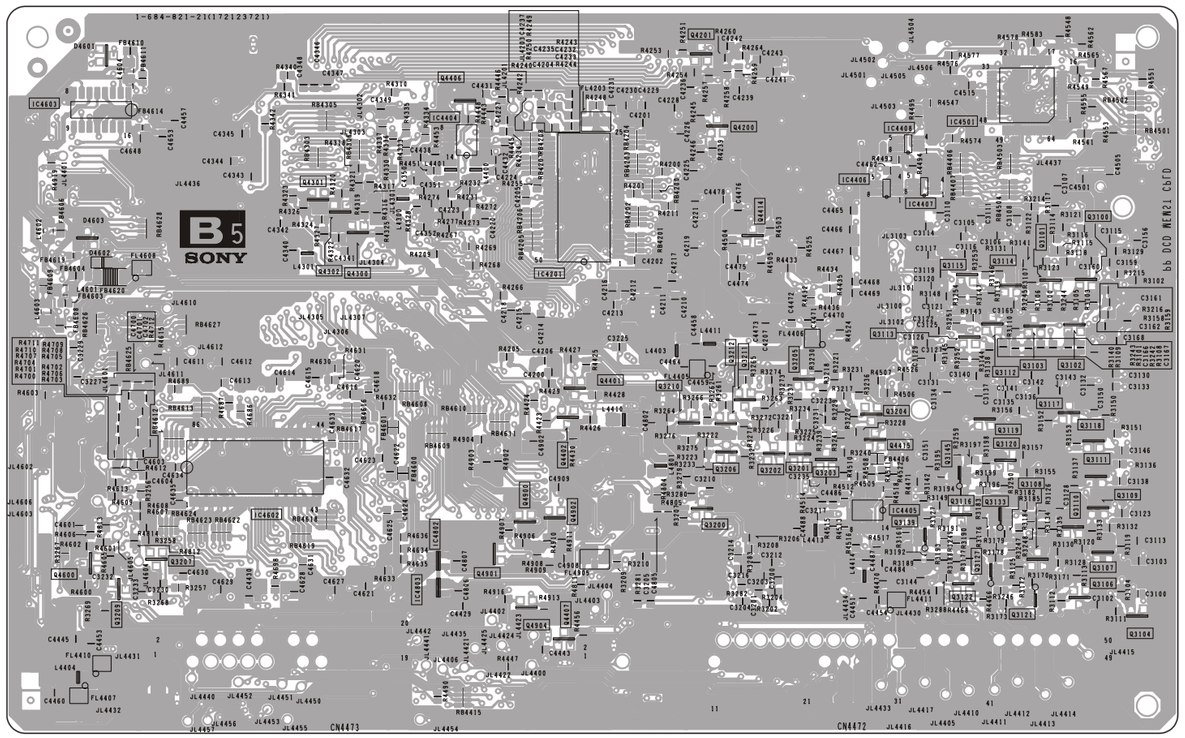

~ B5 Location Table B Side ~

IC		Q3102	I - 8	Q3112	H - 8	Q3122	H - 10	Q3207	C - 10	Q4407	E - 10
IC4201	F - 8	Q3104	I - 10	Q3113	H - 8	Q3200	F - 10	Q3209	C - 10	Q4600	C - 10
IC4404	E - 7	Q3106	I - 10	Q3114	H - 8	Q3201	G - 9	Q3210	G - 9	Q4900	E - 10
IC4602	D - 9	Q3107	I - 10	Q3116	H - 10	Q3202	G - 9	Q3211	G - 9	Q4901	E - 10
IC4802	E - 10	Q3108	I - 10	Q3117	I - 9	Q3203	G - 9	Q3212	G - 9	Q4902	F- 10
IC4803	E - 10	Q3109	I - 10	Q3118	I - 9	Q3204	H - 9	Q4401	F - 9	Q4904	E - 10
TRANSISTOR		Q3110	I - 10	Q3119	H - 9	Q3205	G - 9	Q4402	F - 9		
Q3100	I - 8	Q3111	I - 10	Q3120	H - 9	Q3206	G - 9	Q4406	E - 7		

B5..-36NX200U

B5 1/8 PICTURE DECODER, DRC, DIGITAL NOISE REDUCTION

IC4401
CXD9665Q
DIGITAL NOISE REDUCTION (DNR)

IC4402
TC7SET04F(TE85R)
INVERTER

IC4403
TC7SET04F(TE85R)
INVERTER

IC4404
TLC2933IPWR-12
READ PLL

IC4406
TC7WH74FU
(TE12R)

IC4407
TC7WH74FU
(TE12R)

IC4408
XX

Q4401
2SK2036
LEVEL_SHIFT

Q4402
2SK2036
LEVEL_SHIFT

Q4405
2SD601AR-115
BUFFER

Q4406
2SA1037AK
LIMITTER

Q4407
2SD601A-Q-TX
LEVEL SHIFT

Q4408
2SD601AR-115
BUFFER

Q4412
DTC144EKA

Q4413
DTC144EKA

D4400
UDZSTE-173.9B

CN4472
50P

CN4473
20P

TO A BOARD
CN7109

DIYD[0-7],DICD[0-7],W13ID,IHDD,IVDD
DDTB
B5 2/8

DCDB
B5 6/8

CPLD
B5 3/8

DTV
B5 3/8

DCDB_C[0-7],DCDB_Y[0-7],CLKO,VSO,HSO,CGEN

COMPONENTS MARKED AS XX ARE NOT FITTED ON THIS MODEL

COMPONENTS MARKED AS XX ARE NOT FITTED ON THIS MODEL

DIYD[0-7],DICD[0-7],W13ID,IHDD,IVDD
DDTB
B5 1/8

IC4203
CXD2095AQ
DIGITAL REALITY CREATION (DRC-MF)

IC4201
W98166BH-7-EL10
16Mb SDRAM

B5 2/8

~ B5 Board Schematic Diagram [Picture Decoder, DRC, Digital Noise Reduction] Page2/8 ~

B5_-36NX200U

B5 3/8

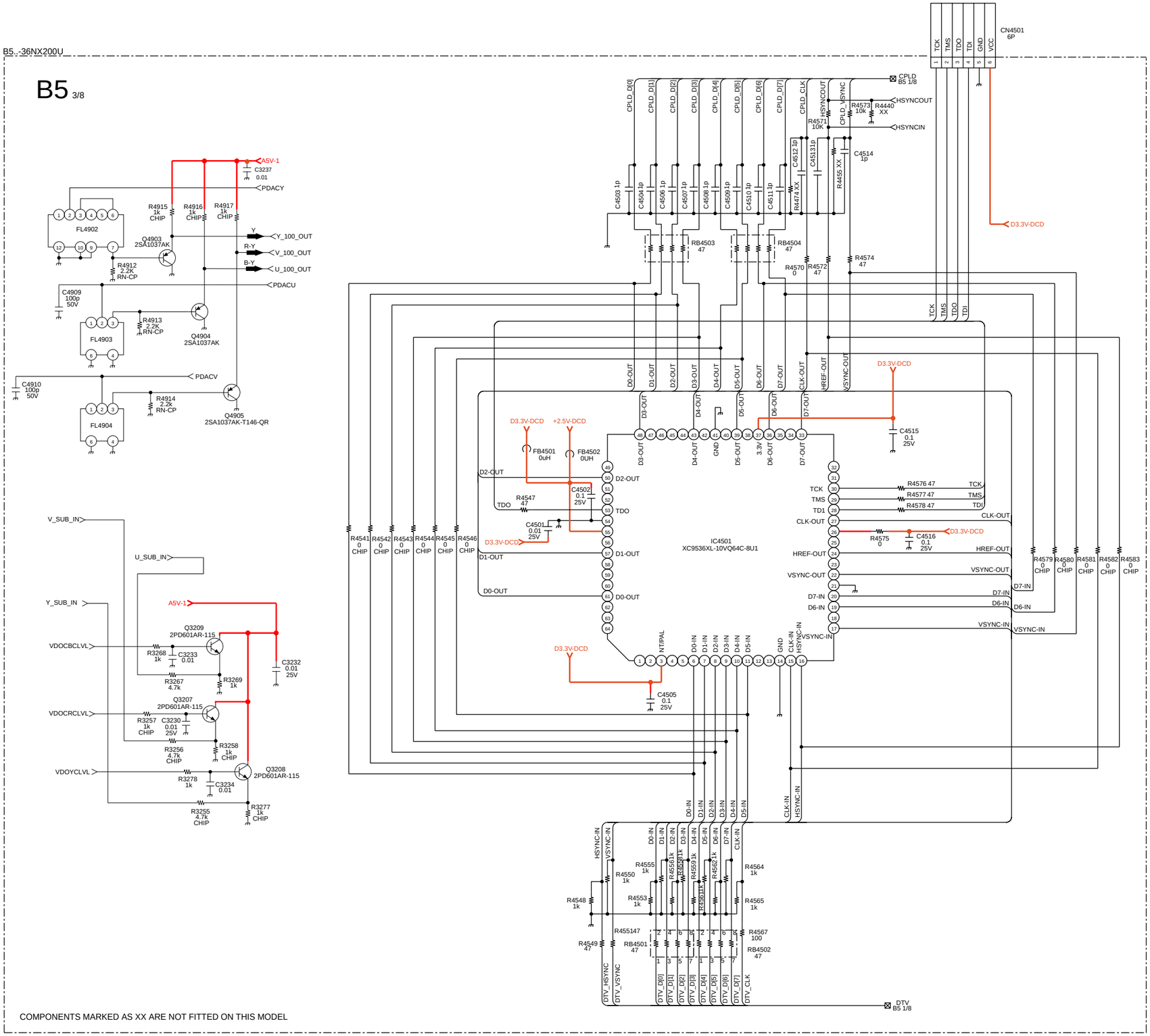

COMPONENTS MARKED AS XX ARE NOT FITTED ON THIS MODEL

~ B5 Board Schematic Diagram [Picture Decoder, DRC, Digital Noise Reduction] Page 3/8 ~

B5_-36NX200U

B5 4/8

IC4600
CXD9509AQ
MID-XA

ADD, DATA, WE, RAS, CAS, CS
B5 5/8

D_OUT
B5 8/8

DSP_Y/CR/CB

PDAC_IN
B5 8/8

MS_YC

COMPONENTS MARKED AS XX ARE NOT FITTED ON THIS MODEL

B5..-36NX200U

B5 5/8

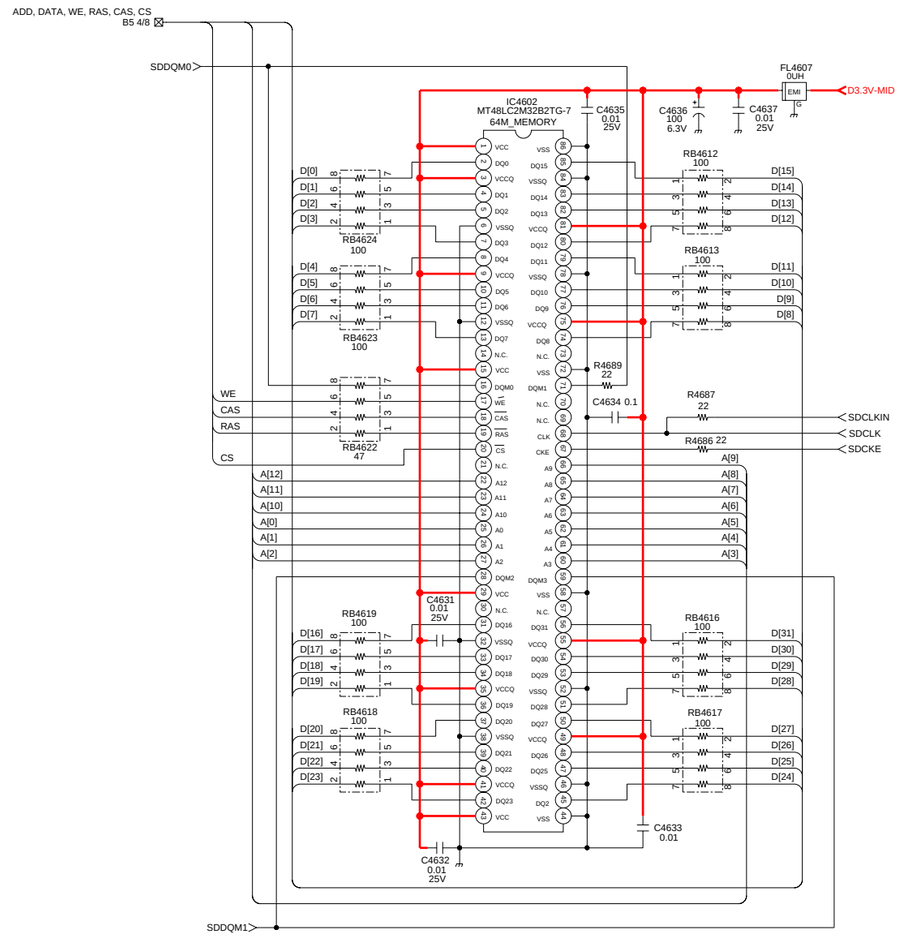

COMPONENTS MARKED AS XX ARE NOT FITTED ON THIS MODEL

~ B5 Board Schematic Diagram [Picture Decoder, DRC, Digital Noise Reduction] Page 5/8~

B5 6/8

IC3100
CXD2096Q
DIGITAL CHROMA DECODER

COMPONENTS MARKED AS XX ARE NOT FITTED ON THIS MODEL

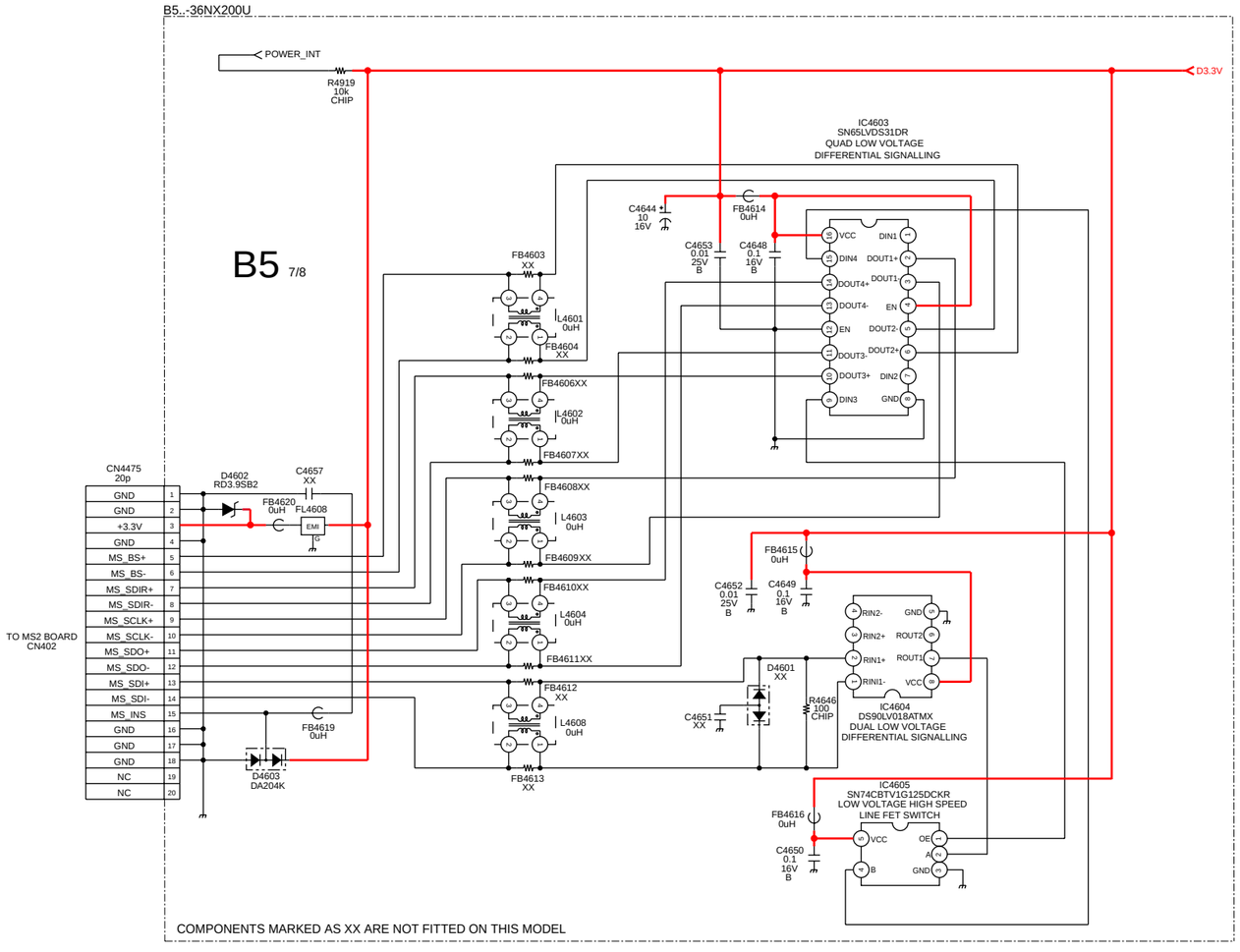

~ B5 Board Schematic Diagram [Picture Decoder, DRC, Digital Noise Reduction] Page 7/8 ~

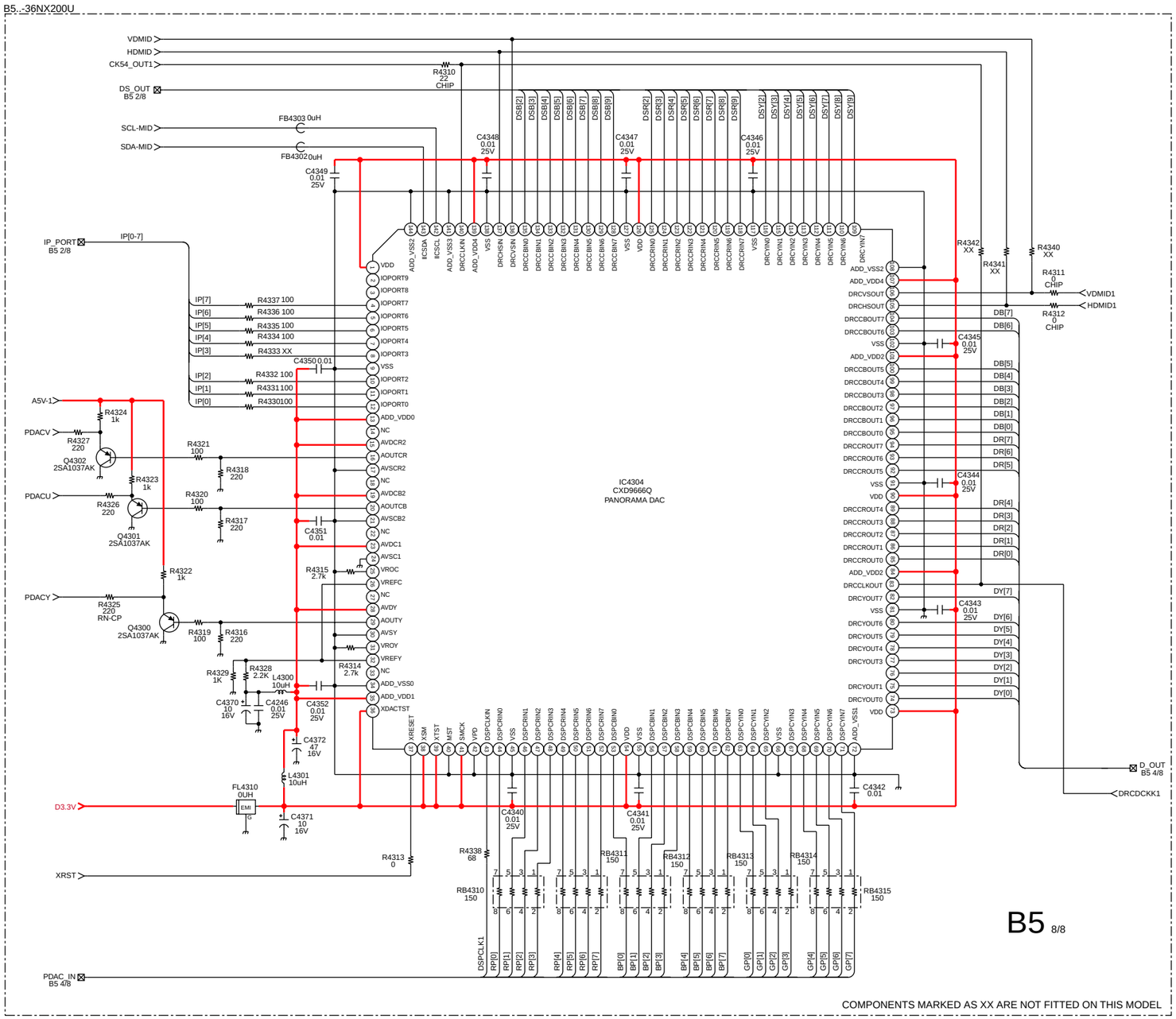

~ B5 Board Schematic Diagram [Picture Decoder, DRC, Digital Noise Reduction] Page 8/8 ~

~ C1 Printed Wiring Board Conductor side ~

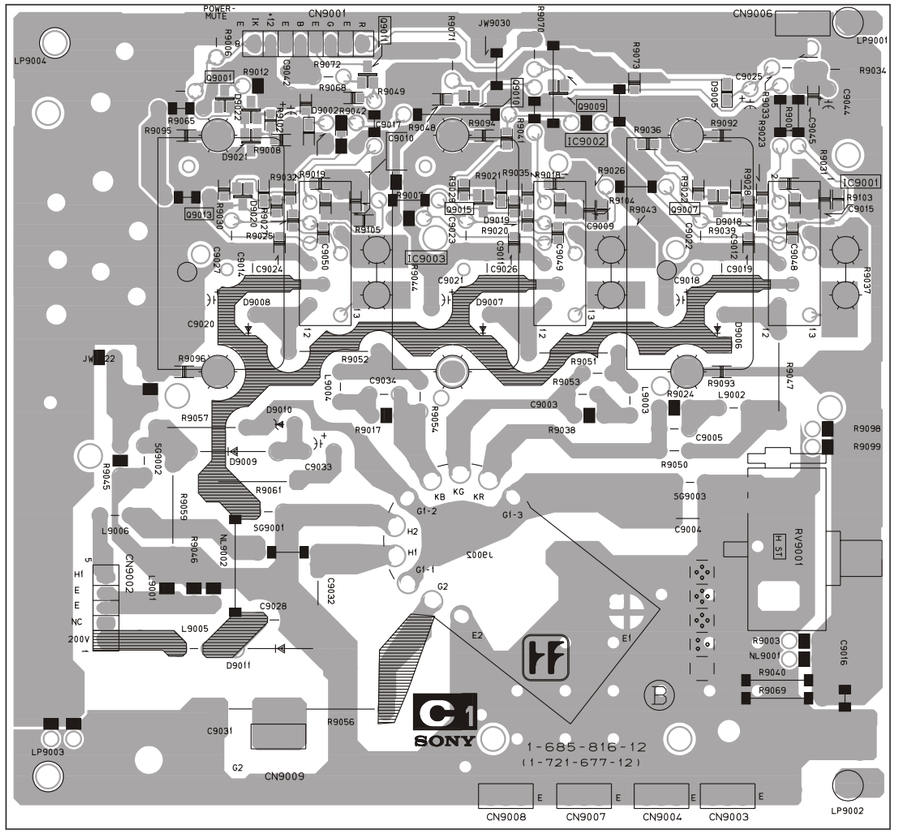

~ C1 Board Waveforms ~

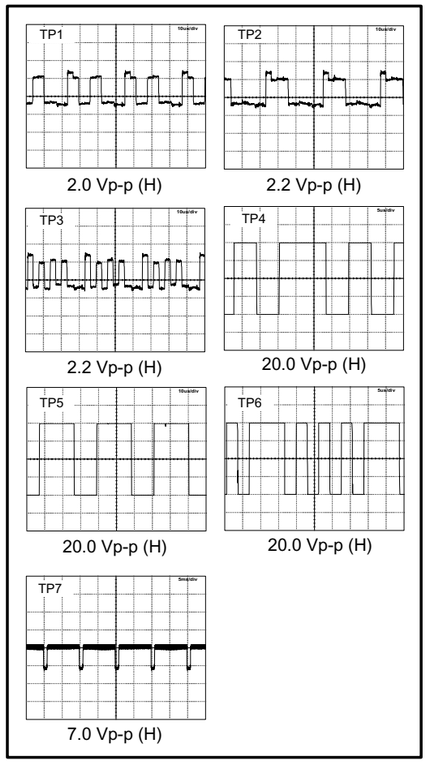

~ MS2 Printed Wiring Board Conductor side A ~

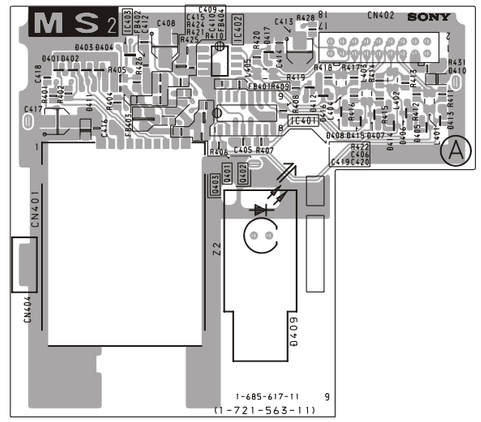

~ MS2 Printed Wiring Board Conductor side B ~

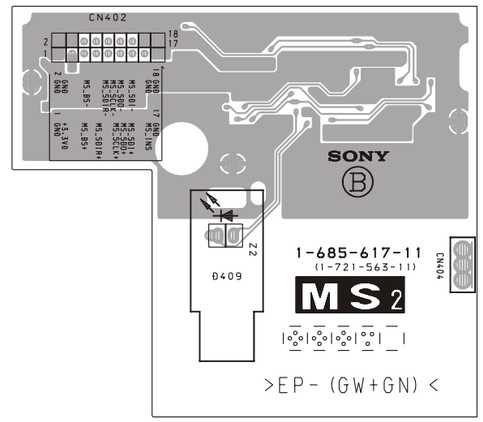

~ C1 Board Semiconductor Voltage Table ~

Ref	(e)	(b)	(c)
Q9001	5.5	7.1	12.0
Q9007	10.3	11.3	12.0
Q9009	3.6	2.8	0
Q9010	3.6	2.9	0
Q9011	3.7	2.9	0
Q9013	10.4	11.4	12.0
Q9015	9.4	10.5	12.0

~ C1 Board IC Voltage Table ~

Ref No	Pin No	Volts (V)	Ref No	Pin No	Volts (V)	Ref No	Pin No	Volts (V)
IC9001	1	2.7	IC9002	1	2.7	IC9003	1	2.7
	2	3.6		2	3.6		2	3.8
	3	2.9		3	3.0		3	2.9
	4	3.7		4	3.7		4	3.7
	5	2.0		5	2.1		5	2.0
	6	12.0		6	11.9		6	12.0
	7	11.4		7	10.7		7	11.5
	8	0		8	0		8	0
	10	211.6		10	211.5		10	211.6
	12	153.1		12	151.0		12	143.0
	13	145.0		13	142.6		13	136.4

~ H Printed Wiring Board Conductor side ~

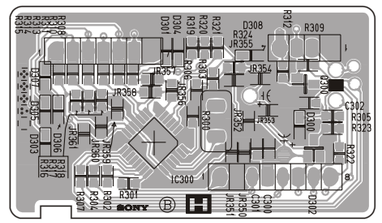

C1 R,G,B OUT

C1.-36NX200U

IC9001 TDA6120Q/N2/S1 — RED-VIDEO-OUT

IC9002 TDA6120Q/N2/S1 — GREEN-VIDEO-OUT

IC9003 TDA6120Q/N2/S1 — BLUE-VIDEO-OUT

CN9001 8P WHT — TO A BOARD CN1804

CN9006 XX

CN9009 1P — G2

CN9002 5PWHT — +200V, NC, E, E, H1 — TO D1 BOARD CN8614

CN9003 XX — E

CN9004 1P — E

CN9007 XX — E

CN9008 XX — E

FV FOCUS

V901 W86LPH010X PICTURE TUBE — KG KB G2 H CV KR G1 G4 HV — TO D2 BOARD HV (T6800)

COMPONENTS MARKED AS XX ARE NOT FITTED ON THIS MODEL

~ C1 Board Schematic Diagram [R-G-B Out] ~

~ H Board Schematic Diagram [AV Link Processor] ~

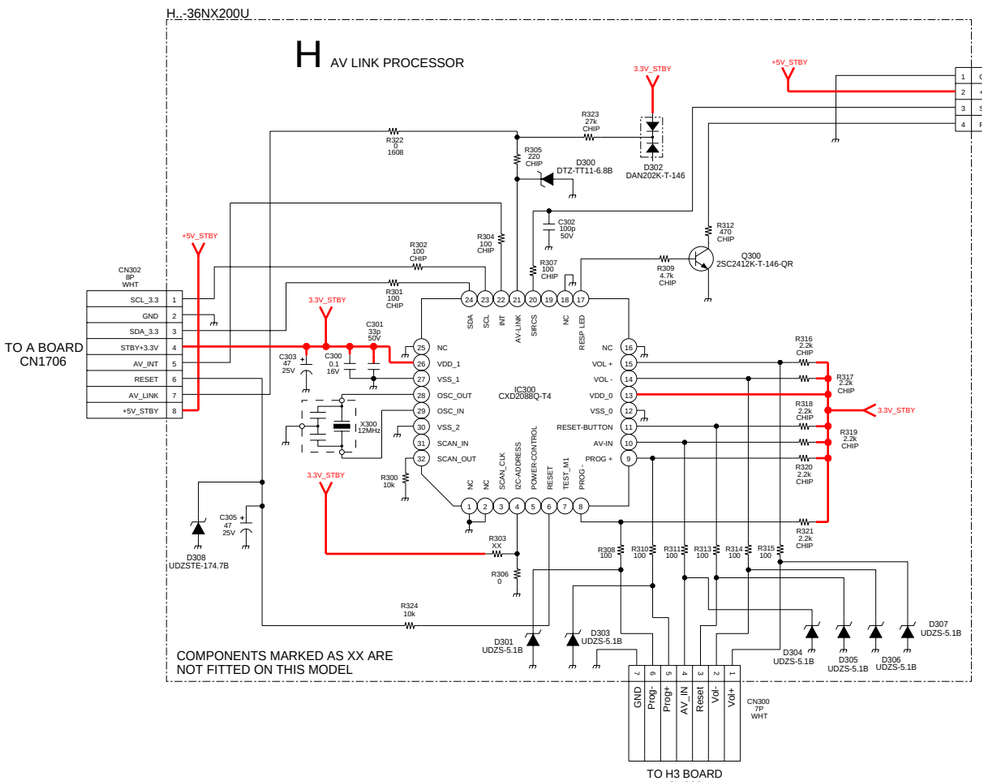

~ MS2 Board Schematic Diagram [Memory Stick] ~

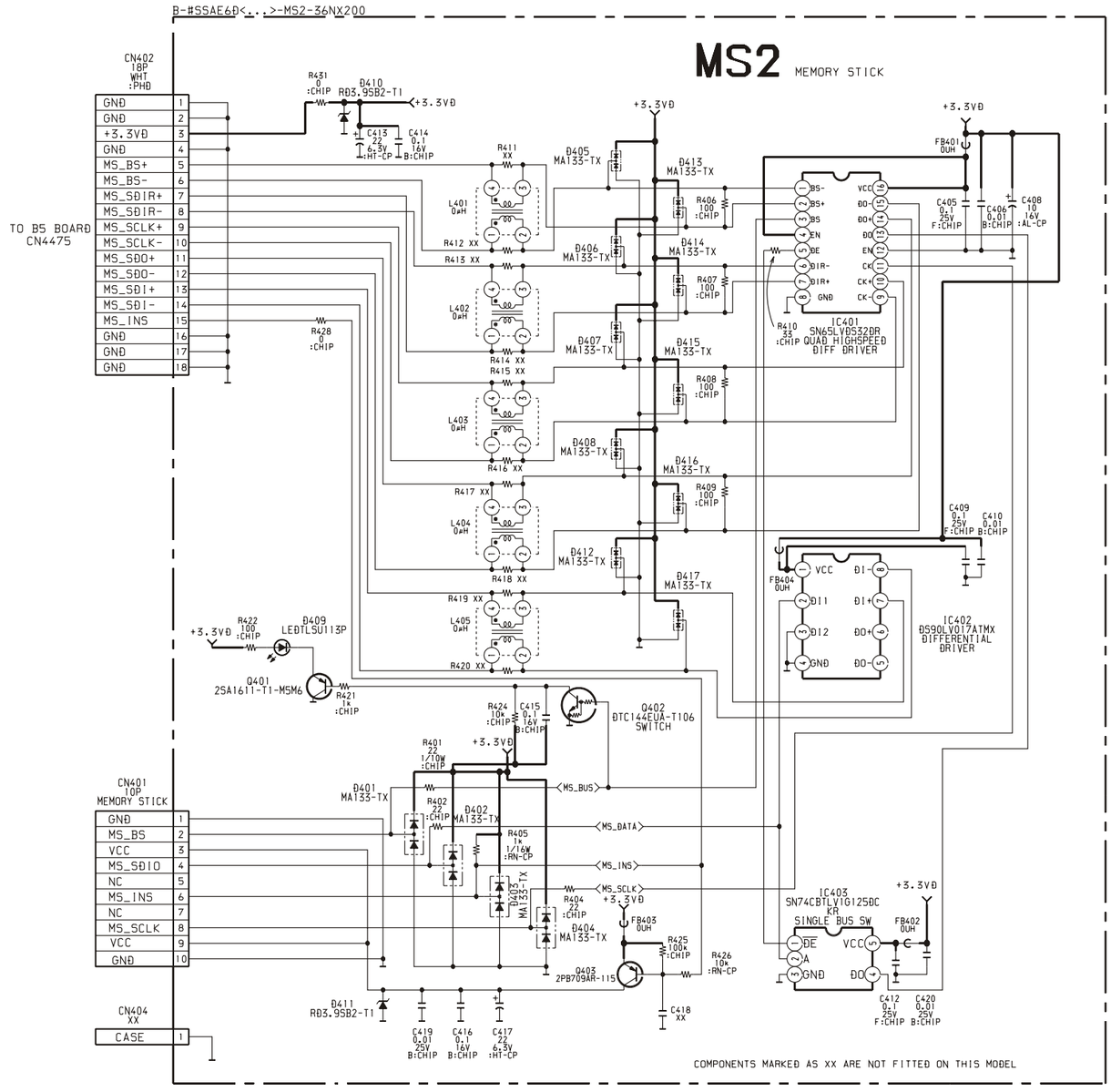

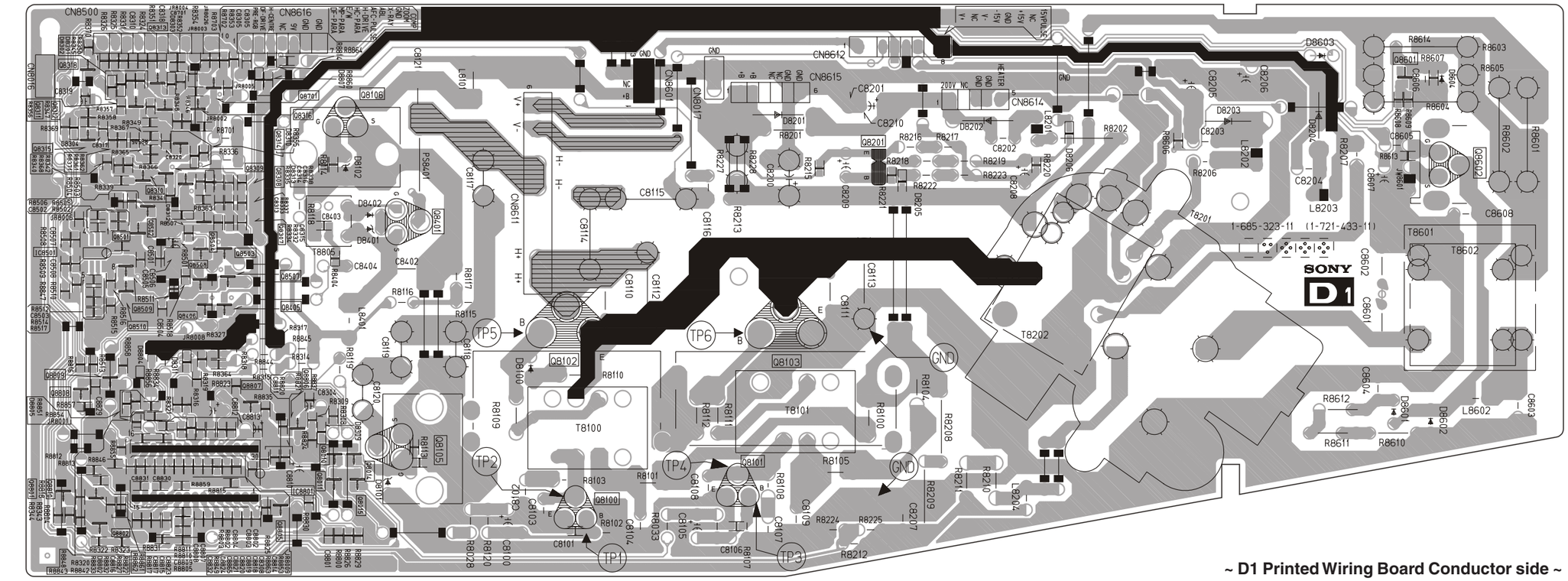

~ D1 Printed Wiring Board Conductor side ~

~ D1 Board Waveforms ~

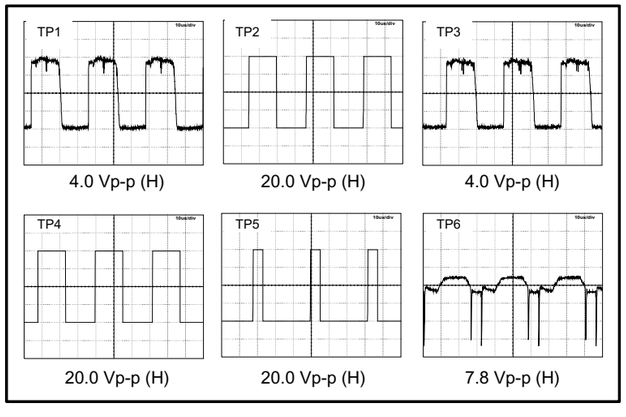

~ D1 Board Location Table ~

DIODE						TRANSISTOR								
D8100	E - 4	D8311	B - 4			Q8010	D - 5	Q8105	D - 5	Q8801	A - 5			
D8101	D - 5	D8312	B - 3			Q8011	D - 5	Q8106	D - 2	Q8802	B - 6			
D8102	D - 2	D8313	C - 3			Q8014	D - 5	Q8501	B - 3	Q8806	C - 5			
D8201	H - 2	D8802	B - 5			Q8015	D - 5	Q8502	B - 3	Q8807	C - 4			
D8202	I - 2	D8804	B - 4			Q8100	F - 5	Q8503	C - 3	Q8808	B - 4			
D8203	K - 2	D8805	B - 4			Q8101	G - 5	Q8504	C - 3	Q8809	B - 4			
D8204	L - 2	IC				Q8102	F - 4	Q8507	C - 3	Q8810	A - 5			
D8309	D - 5	IC8501	A - 3			Q8103	H - 4	Q8701	C - 2					
		IC8801	C - 5											

~ D1 Board IC Voltages ~

Ref No	Pin No	Voltage (V)	Ref No	Pin No	Voltage (V	Ref No	Pin No	Voltage (V	Ref No	Pin No	Voltage (V	Ref No	Pin No	Voltage (V
IC8801	1	4.4	IC8801	7	3.7	IC8801	13	3.0	IC8801	19	2.6	IC8801	25	4.2
	2	2.7		8	3.7		14	1.0		20	5.5		26	3.8
	3	3.4		9	3.2		15	0		21	2.6		27	2.7
	4	1.4		10	3.2		16	3.2		22	1.0		28	3.9
	5	0		11	1.3		17	1.7		23	1.0		29	3.8
	6	3.0		12	2.1		18	3.2		24	5.5		30	8.8

~ D1 Board Semiconductor Voltages ~

Ref	(s)	(g)	(d)
Q8105	0	3.2	21.1
Q8106	0	1.1	135.2
Ref	**(e)**	**(b)**	**(c)**
Q8010	4.0	3.9	8.9
Q8011	4.0	3.9	0
Q8014	3.9	3.8	8.9
Q8015	3.9	3.8	0
Q8308	0.9	0.2	0
Q8503	3.2	3.2	8.9
Q8504	3.2	3.2	0
Q8507	1.1	1.0	8.9
Q8508	1.1	1.0	0
Q8701	0.5	0	8.9
Q8806	0	0.7	0
Q8807	4.4	3.8	0
Q8808	0	2.1	0
Q8809	0	0	1.0

D1..-36NX200U

COMPONENTS MARKED AS XX ARE NOT FITTED ON THIS MODEL

HORIZONTAL OUTPUT STAGE REF's 81XX

PRE-RGB PICTURE ZOOM COMPENSATION

D1 HORIZONTAL DEFLECTION CCT

~ D1 Board Schematic Diagram [Horizontal Deflection] ~

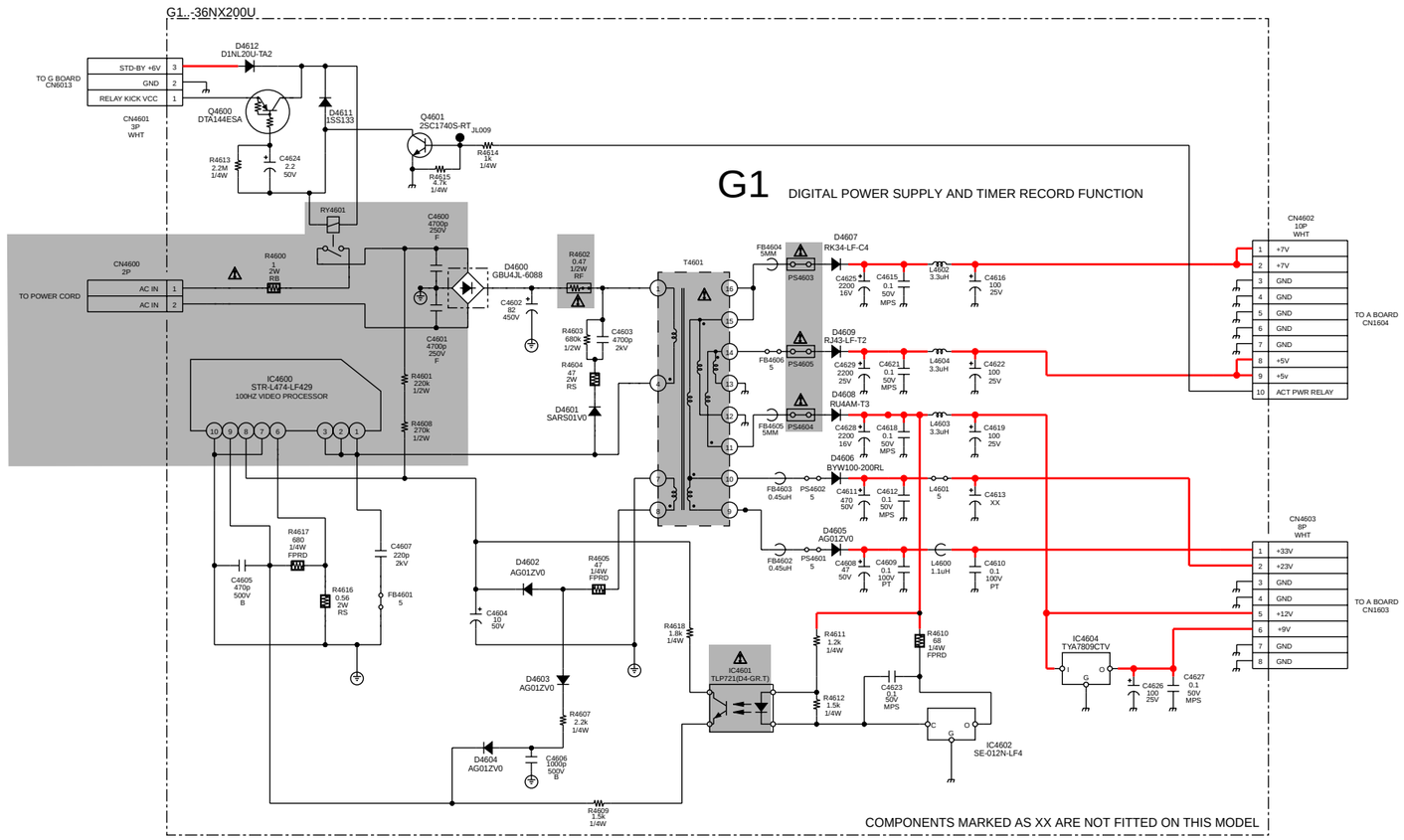

~ G1 Board Schematic Diagram [Digital Power Supply and Timer Record Function] ~

~ G1 Printed Wiring Board Conductor Side~

~ D2 Printed Wiring Board Conductor Side~

~ D2 Board IC Voltages ~

Ref No	Pin No	Voltage (V)
IC6800	1	1.6
	2	1.8
	3	2.3
	4	2.5
	5-6	0
	7	4.6
	8	13.9
	9	0
	10	10.2
	11	0
	12	4.4
	18	196.0
IC6801	1	0
	2	2.5
	3	2.1
	4	0
	5	2.2
	6	2.5
	7	0
	8	14.7

Ref No	Pin No	Voltage (V)
IC6802	1-4	0
	5	6.8
	6	6.7
	7	6.7
	8	14.2
IC6803	1-2	0
	3	1.7
	4	1.2
	5	0
IC6807	1	2.5
	2	0
	3	2.5

~ D2 Board Location Table ~

DIODE	D6803 O - 5	D6813 L - 3	D6817 L - 2	D6823 I - 5	D6829 L - 5	**IC**	IC6803 L - 2	Q6802 O - 3	Q6807 J - 5	Q6815 I - 4
D6800 N - 4	D6804 J - 4	D6814 N - 3	D6820 L - 2	D6824 I - 4	D6830 L - 3	IC6800 N - 4	IC6807 O - 3	Q6803 O - 3	Q6808 M - 3	Q6816 I - 4
D6801 L - 4	D6806 N - 3	D6815 M - 3	D6821 I - 4	D6825 N - 3	D8919 H - 3	IC6801 O - 3	**TRANSISTOR**	Q6804 M - 4	Q6813 K - 2	Q6817 I - 5
D6802 M - 5	D6811 J - 5	D6816 L - 2	D6822 M - 3	D6828 O - 5	D8927 J - 5	IC6802 K - 1	Q6801 O - 4	Q6805 N - 4	Q6814 K - 2	Q8909 H - 3

~ D2 Board Semiconductor Voltages ~

Ref	(e)	(b)	(c)
Q6801	0	0.6	0
Q6802	0	0	1.6
Q6803	0	0	1.6
Q6807	0	0.6	0
Q6808	0	0.6	0
Q6813	11.9	11.4	1.2
Q6814	0	0	11.9
Q6815	11.9	11.9	0
Q6816	0	0	11.7
Q6817	11.9	11.7	0
Q8918	0	6.4	0

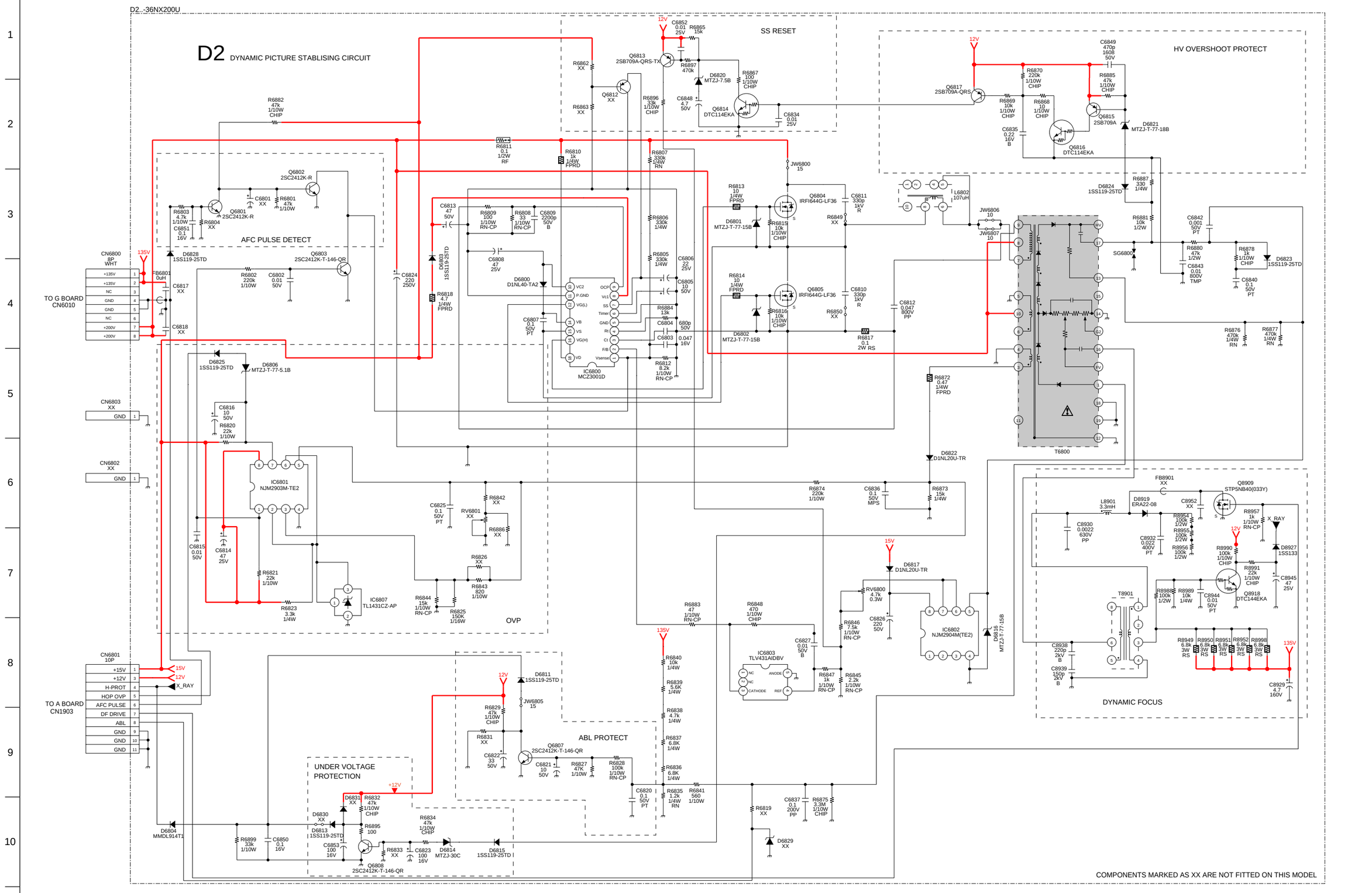

~ D2 Board Schematic Diagram [Dynamic Picture Stabilising Circuit] ~

~ M2 Printed Wiring Board Conductor side A ~

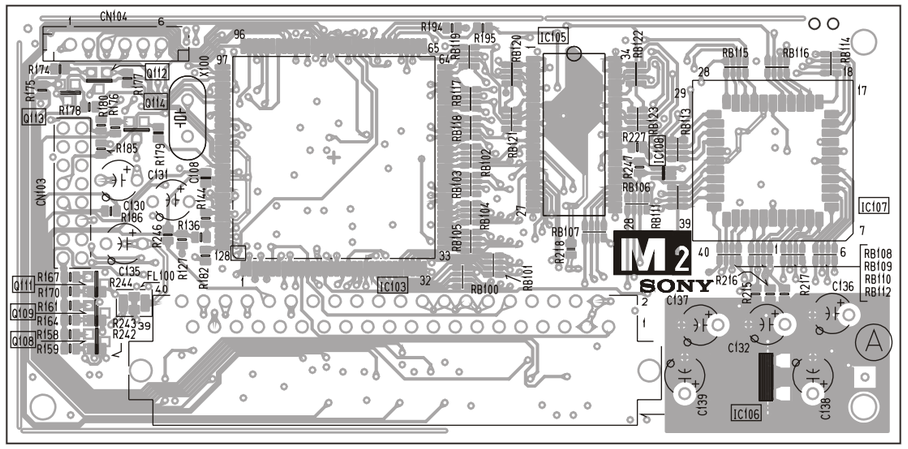

~ M2 Printed Wiring Board Conductor side B ~

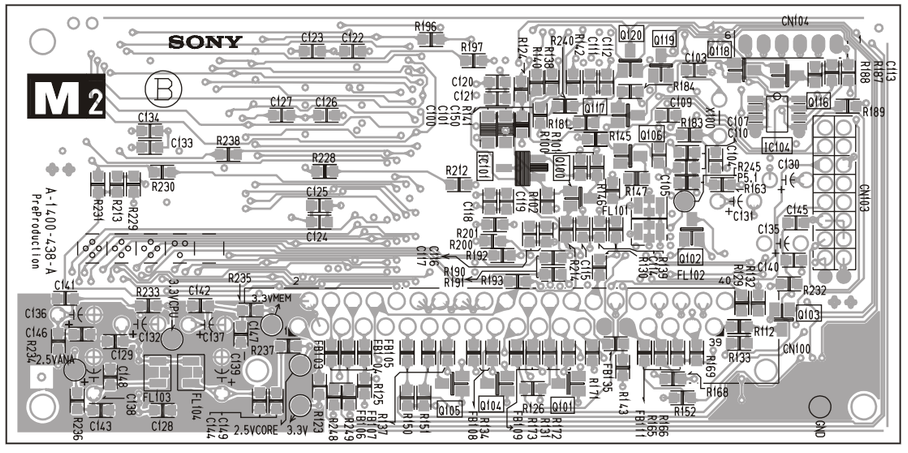

~ M2 Board IC Voltages ~

Ref No	Pin No	Voltage (V)
IC103	1-3	0.4
	4-5	3.3
	6	0
	7	3.3
	8	2.9
	9	3.6
	10	3.3
	11	3.3
	12-13	0
	14-15	3.3
	16	0
	17	0.5
	18	0
	19	0.5
	20	0
	21	2.5
	22-23	0
	24	2.4
	25	1.6
	26	2.4
	27	2.5
	28-29	0.2
	30-31	0
	32	3.3
	33	0.7
	34-37	0.8
	38	3.1
	39	2.1
	40	1.5
	41	0
	42	3.3
	43	1.5
	44	3.1
	45	3.3
	46	2.0
	47	2.1
	48-49	0
	50	3.2
	51	1.9
	52	0
	53	3.3
	54	1.4
	55	0.2
	56	2.0
	57	0.4
	58	1.3
	59	0.7
	60	0
	61	3.3
	62	0.8
	63	0.4
	64	0.8
	65	1.2
	66-67	0.8
	68	0
	69	3.3
	70	0.6
	71	0.8
	72	1.2
	73	3.0
	74-75	2.7
	76	0
	77-78	3.3
	79	0
	80	3.3
	81	0
	82-83	2.8
	84	0
	85	3.3
	86	0
	87	2.5

Ref No	Pin No	Voltage (V)
IC103	88	3.3
	89	2.8
	90	3.3
	91	2.8
	92	3.3
	93-94	0.4
	95	2.7
	96-97	3.3
	98-99	3.0
	100	3.3
	101	3.3
	102	0
	103	0.2
	104	0
	105	0
	106	3.3
	107	0
	108	0.7
	109	0.4
	110	0
	111	2.5
	112	0.3
	113	0.3
	114	0.3
	115	0
	116	2.5
	117	0
	118	0
	119	2.5
	120	0
	121	1.2
	122	0
	123	2.5
	124	0
	125	2.5
	126	0.6
	127	0.6
	128	0
IC104	1-4	0
	5-6	3.0
	7-8	3.3
IC105	1	3.3
	2	0.2
	3	3.3
	4	0.7
	5	1.2
	6	0
	7	0.8
	8	0.5
	9	3.3
	10	0.9
	11	1.3
	12	0
	13	1.3
	14	3.3
	15	0
	16	3.3
	17-18	1.8
	19	3.1
	20	0.6
	21	3.1
	22	0.2
	23-26	0.9
	27	3.3
	28	0
	29	0.8
	30-31	2.4
	32	2.1
	33	1.5
	34	2.0
	35	0.2

Ref No	Pin No	Voltage (V)
IC105	36	0
	37	3.3
	38	1.5
	39-41	0
	42	0.2
	43	3.3
	44	0.2
	45	0.8
	46	0
	47	1.2
	48	0.8
	49	3.3
	50	0.6
	51	1.9
	52	0
	53	1.9
	54	0
IC107	1-2	0
	3	0.6
	4	2.0
	5-6	2.4
	7	0.8
	8-11	0.9
	12	1.4
	13	0
	14	2.1
	15	0.2
	16	0.4
	17	0.8
	18	0.2
	19	1.2
	20-21	0.9
	22	1.2
	23	0
	24	3.3
	25	0.5
	26-28	0.9
	29	1.4
	30	2.1
	31	1.4
	32	2.0
	33	0
	34	3.3
	35	0
	36-37	1.8
	38	3.0
	39	0.7
	40-41	0.2
	42	2.1
	43	1.6
	44	0.7

~ M2 Board Semiconductor Voltages ~

Ref	(s)	(g)	(d)
Q108	2.7	3.3	4.7
Q109	2.7	3.3	4.8
Q111	3.3	3.3	4.9
Ref	**(e)**	**(b)**	**(c)**
Q101	0	0.7	0
Q103	0	0	4.1
Q104	0	0.7	0
Q105	0	0	4.9
Q106	0	0.7	0
Q112	0.9	0.3	0
Q113	0.9	0.3	0
Q114	0.9	0.3	0
Q116	2.6	0	3.0
Q117	0	0.7	0
Q118	3.0	0	2.6
Q119	2.6	0	3.0
Q120	3.0	0	2.6

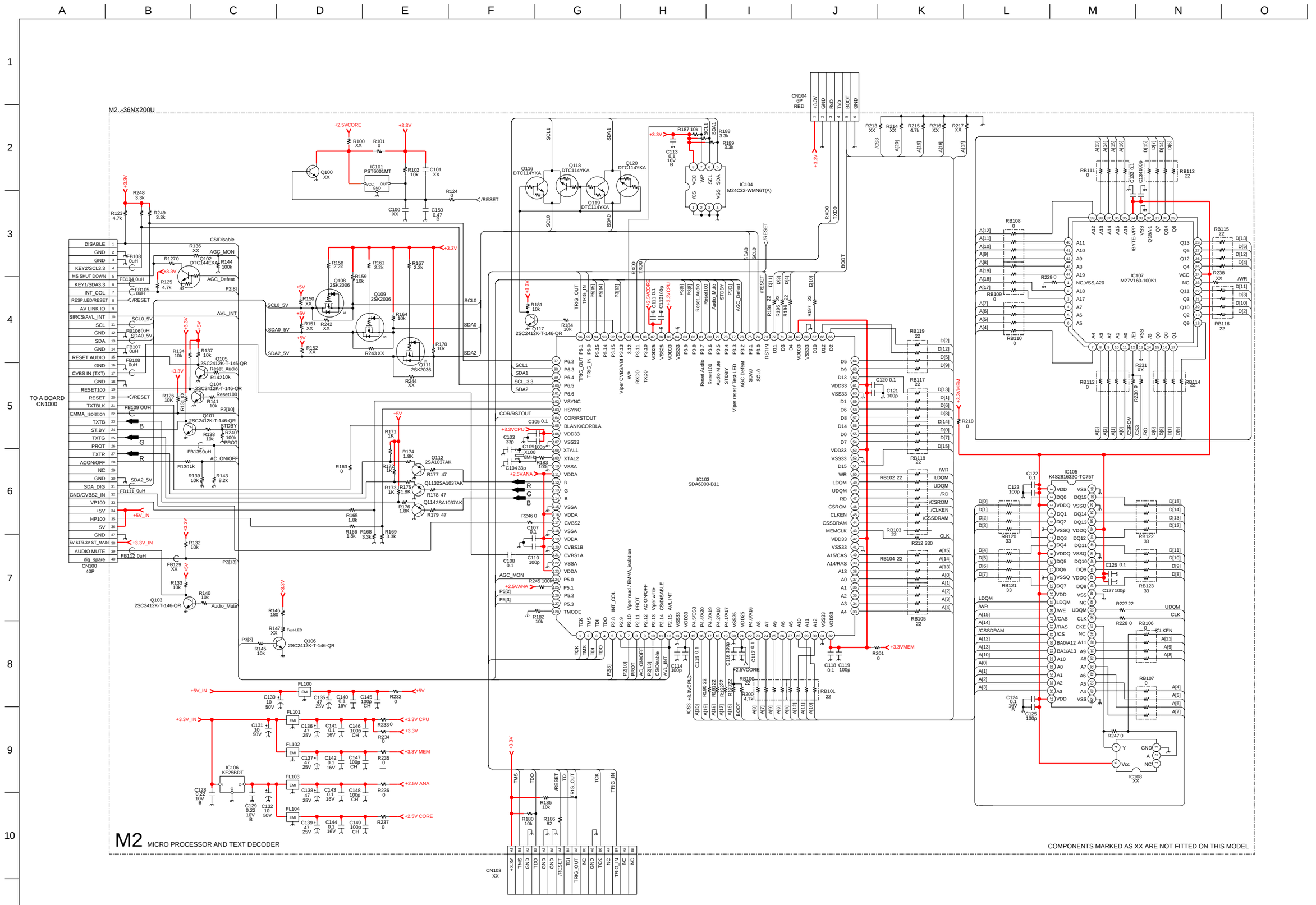
M2_.36NX200U
M2 MICRO PROCESSOR AND TEXT DECODER
COMPONENTS MARKED AS XX ARE NOT FITTED ON THIS MODEL
TO A BOARD CN1000
CN100 40P
IC101 PST6001MT
IC104 M24C32-WMN6T(A)
IC103 SDA6000-B11
IC107 M27V160-100K1
IC105 K4S281632C-TC75T
IC106 KF25BDT
IC108 XX
CN104 6P RED
CN103 XX
Q100 XX
Q102 DTC144EKA
Q103 2SC2412K-T-146-QR
Q104 2SC2412K-T-146-QR
Q105 2SC2412K-T-146-QR
Q106 2SC2412K-T-146-QR
Q108 2SK2036
Q109 2SK2036
Q111 2SK2036
Q112 2SA1037AK
Q116 DTC114YKA
Q117 2SC2412K-T-146-QR
Q118 DTC114YKA
Q119 DTC114YKA
Q120 DTC114YKA
Q132 2SA1037AK
Q141 2SA1037AK
DISABLE
GND
KEY2/SCL3.3
MS SHUT DOWN
KEY1/SDA3.3
INT_COL
RESP.LED/RESET
AV LINK IO
SIRCS/AVL_INT
SCL
SDA
RESET AUDIO
CVBS IN (TXT)
RESET100
RESET
TXTBLK
EMMA_isolation
TXTB
ST.BY
TXTG
PROT
TXTR
ACON/OFF
NC
SDA_DIG
GND/CVBS2_IN
VP100
+5V
HP100
5V
5V ST/3.3V ST_MAIN
AUDIO MUTE
dig_spare
CS/Disable
AGC_MON
AGC_Defeat
AVL_INT
Reset_Audio
Reset100
STDBY
AC_ON/OFF
Audio_Mute
Test-LED
+5V_IN
+3.3V_IN
+2.5VCORE
+3.3VCPU
+2.5VANA
+3.3VMEM
SCL0_5V
SDA0_5V
SDA2_5V
SCL0
SDA0
SDA2
SCL1
SDA1
SCL_3.3
COR/RSTOUT
BLANK/CORBLA
VDD33
VSS33
XTAL1
XTAL2
VSSA
VDDA
CVBS2
CVBS1B
CVBS1A
P5.0
P5.1
P5.2
P5.3
TMODE
TRIG_OUT
TRIG_IN
Viper CVBSVBI
Viper read / EMMA_isolation
Viper write
/RESET
TXD0
RXD0
BOOT
/CS3
/CSROM
/CLKEN
/CSSDRAM
CLK
/WR
LDQM
UDQM
/RD
/IRESET
TDI
TMS
TDO
TCK
TRIG_IN
TRIG_OUT
FB103 0uH
FB104 0uH
FB105 0uH
FB106 0uH
FB107 0uH
FB108 0uH
FB109 OUH
FB110 0uH
FB111 0uH
FB112 0uH
FB135 0uH
FL100
FL101
FL102
FL103
FL104
P2[8]
P2[13]
P2[10]
P5[2]
P5[3]
P3[3]
P2[1]
P2[2]
P2[4]
P2[5]
P2[6]
P2[7]
P3[8]
P3[7]
P3[6]
P3[5]
P3[4]
P3[2]
P3[1]
P3[0]
P4.0/A16
P4.1/A17
P4.2/A18
P4.3/A19
P4.4/A20
P4.5/CS3
P6.1
P6.0
P5.15
P5.14
P5.13
P3.13
3.12
P3.11
P3.10
P3.9
P3.8
P6.2
P6.3
P6.4
P6.5
P6.6
VSYNC
HSYNC
A[12]
A[11]
A[10]
A[9]
A[8]
A[19]
A[18]
A[17]
A[7]
A[6]
A[5]
A[4]
A[13]
A[14]
A[15]
A[16]
A[3]
A[2]
A[1]
A[0]
D[0]
D[1]
D[2]
D[3]
D[4]
D[5]
D[6]
D[7]
D[8]
D[9]
D[10]
D[11]
D[12]
D[13]
D[14]
D[15]
/BYTE-VPP
Q15A-1
/WR
/RESET
/IRESET
/IE1
/E
/G
/RD
/CSROM
/CLKEN
/CSSDRAM
/CS
/RAS
/CAS
/WE
NC,VSS,A20
~ M2 Board Schematic Diagram [Micro Processor and Text Decoder] ~

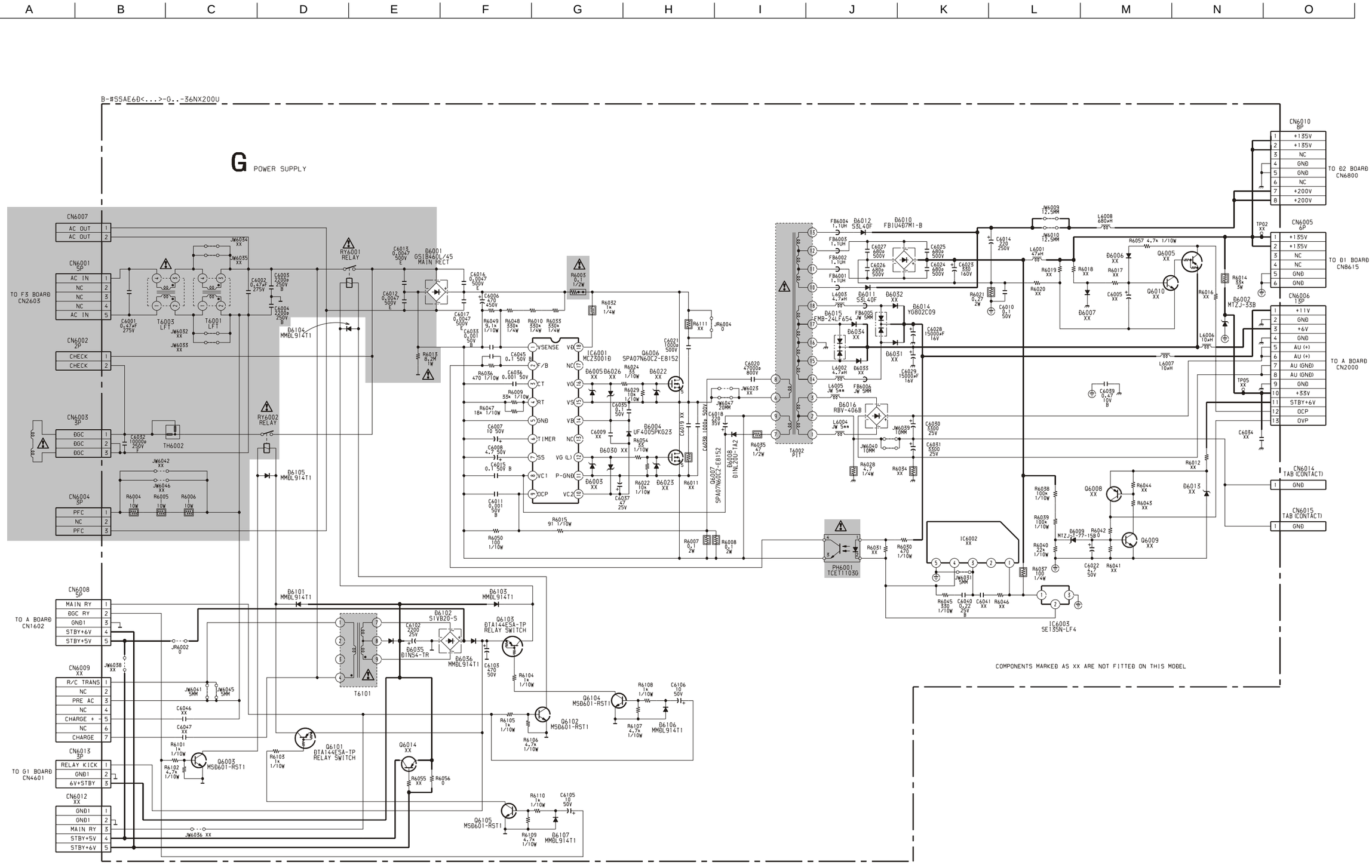

~ G Board Schematic Diagram [Power Supply] ~

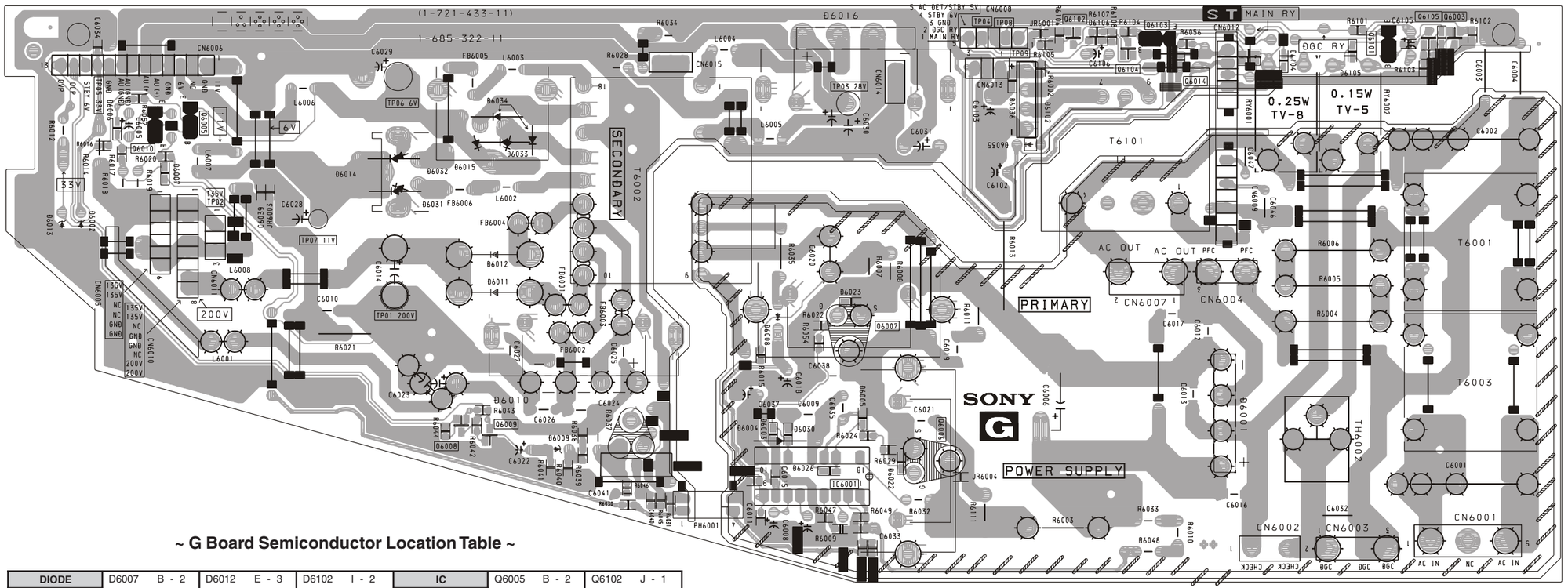

~ G Printed Wiring Board Conductor side ~

~ G Board IC Voltages ~

IC Voltage Table		
Ref No	Pin No	Voltage (V)
IC6003	1	134.0
	2	11.3
	3	0

~ G Board Semiconductor Voltages ~

Ref	(e)	(b)	(c)
Q6003	0	0.3	10.9
Q6005	7.1	6.9	0.6
Q6010	0	0.5	6.9
Q6101	23.8	23.6	11.0
Q6102	0	0.7	0
Q6103	23.7	23.4	10.4
Q6104	0	0	23.4
Q6105	0	0	23.6

~ G Board Semiconductor Location Table ~

DIODE										IC				TRANSISTOR			
D6001	K - 4	D6007	B - 2	D6012	E - 3	D6102	I - 2	IC6001	H - 5	Q6005	B - 2	Q6102	J - 1	Q6003	M - 1	Q6101	L - 1
D6002	A - 2	D6008	G - 3	D6014	D - 2	D6104	K - 1	IC6003	F - 4	Q6006	H - 4	Q6103	J - 1				
D6004	G - 4	D6009	E - 4	D6015	E - 2	D6105	L - 1			Q6007	H - 3	Q6104	J - 1				
D6006	B - 2	D6010	E - 4	D6016	H - 1	D6106	J - 1			Q6010	B - 2	Q6105	M - 1				
		D6011	E - 3	D6035	I - 2	D6107	M - 1			Q6101	L - 1						

~ VM Printed Wiring Board Conductor side ~

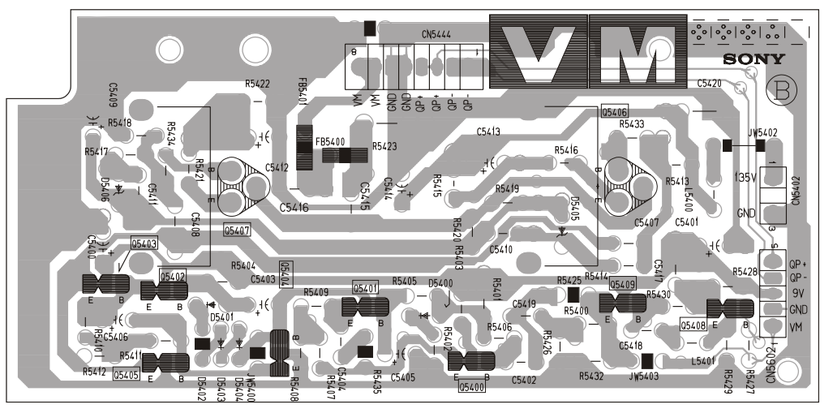

~ VM Board Waveforms ~

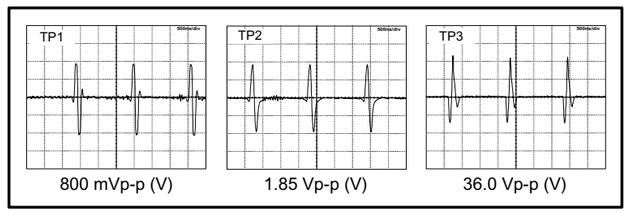

~ VM Board Semiconductor Voltages ~

Ref	(e)	(b)	(c)
Q5400	0.9	1.5	8.8
Q5401	0.9	1.6	5.0
Q5402	5.8	6.4	8.8
Q5403	5.6	5.8	8.8
Q5404	5.6	5.0	0
Q5405	5.6	5.6	0
Q5406	133.9	133.6	67.2
Q5407	1.0	1.3	67.2
Q5408	3.9	3.1	3.9
Q5409	3.9	3.2	8.8

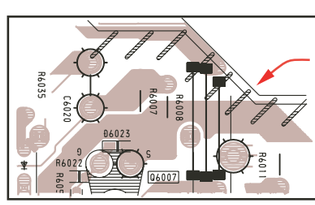

Note :
Portions of the circuit contained within the marked areas as shown have high voltages present. Use care to prevent electric shock during inspection or repair. An Isolation Transformer must be used during any Service work to avoid possible shock hazard due to live chassis. The chassis of this receiver is directly connected to the power line.

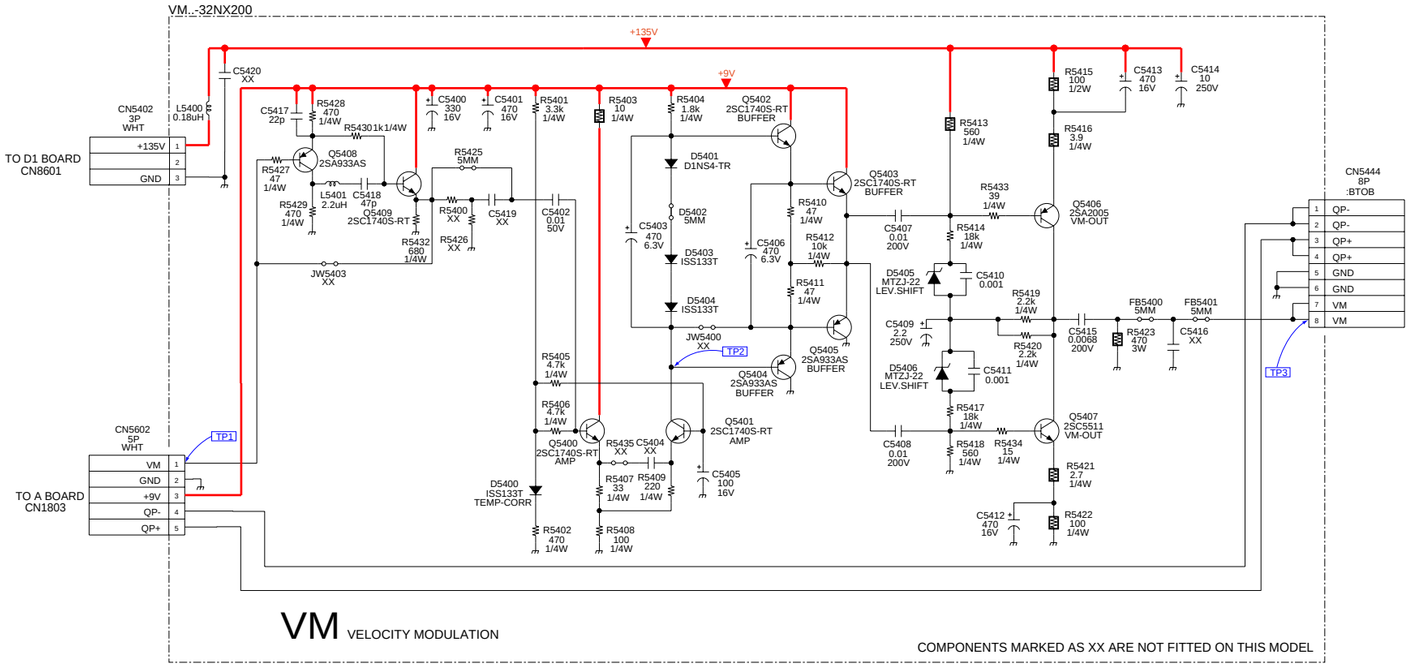

~ VM Board Schematic Diagram [Velocity Modulation] ~

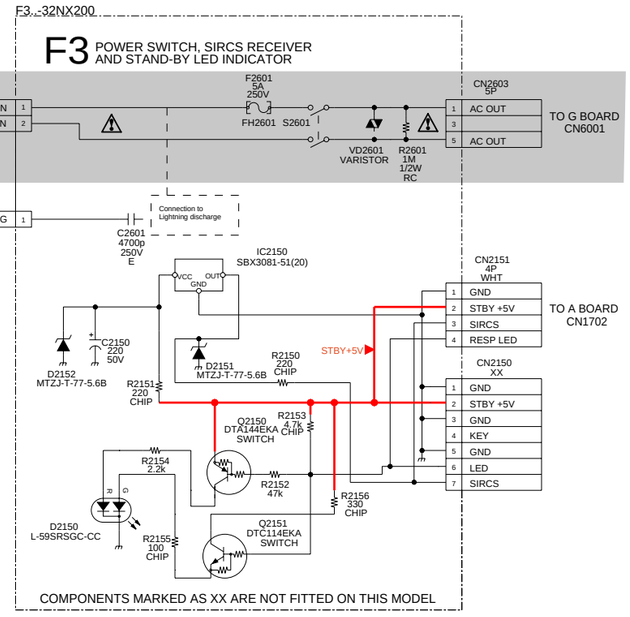

~ F3 Board Schematic Diagram [Power Switch, SIRCS Receiver and Stand-By LED Indicator] ~

~ J3 Printed Wiring Board Conductor side A ~

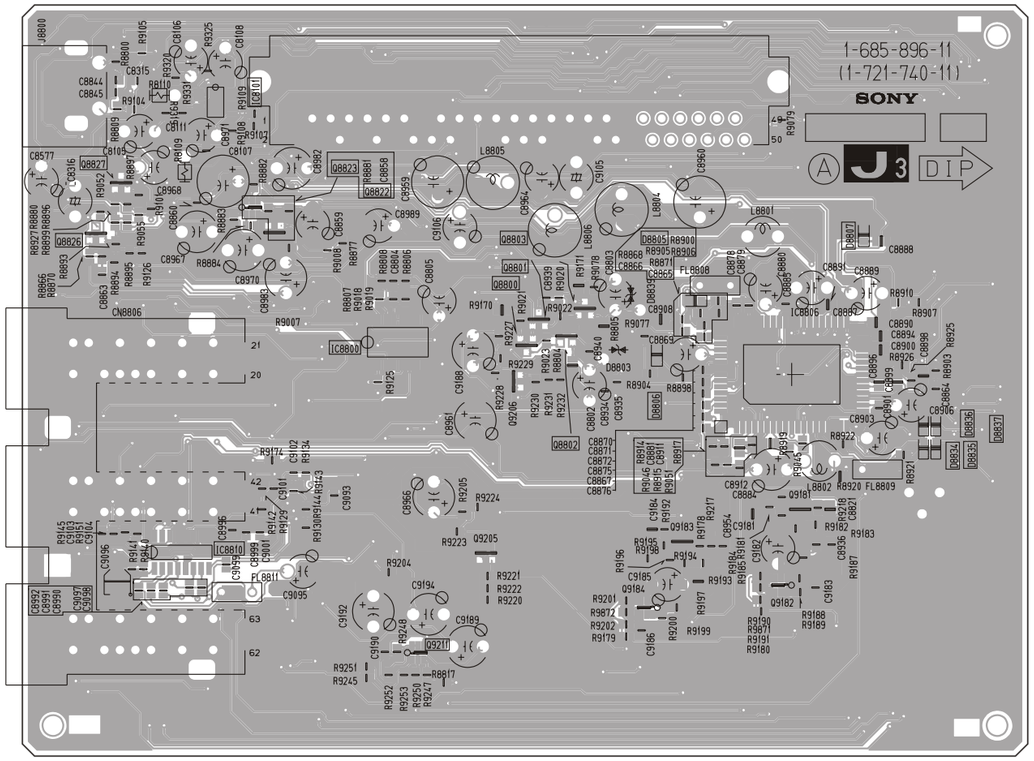

~ J3 Printed Wiring Board Conductor side B ~

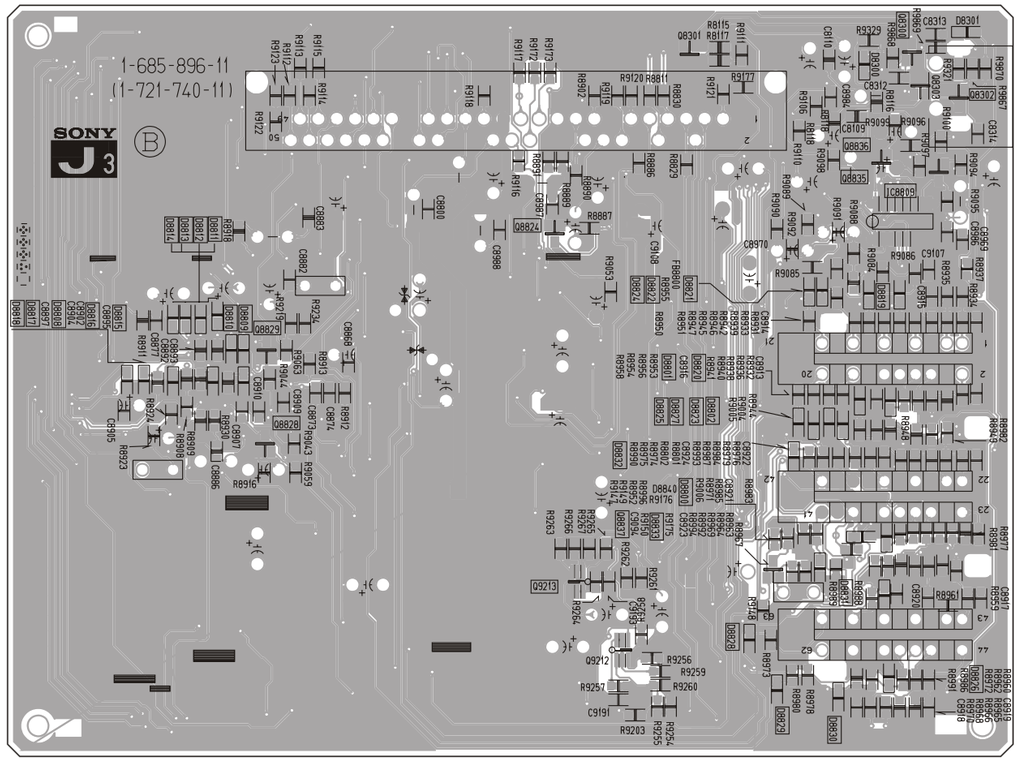

~ J3 Board Location Table A side ~

DIODE		D8839	E - 3	IC8810	B - 5	Q8823	C - 2	Q9183	E - 5
D8803	E - 3	IC		TRANSISTORS		Q8826	B - 2	Q9184	E - 5
D8805	E - 3	IC8101	B - 2	Q8802	E - 3	Q8827	B - 2	Q9205	D - 5
D8806	E - 3	IC8800	C - 3	Q8803	E - 3	Q9181	F - 4	Q9206	D - 4
D8807	G - 3	IC8806	F - 4	Q8822	C - 3	Q9182	F - 5	Q9211	D - 5

~ J3 Board Location Table B side ~

DIODE		D8809	J - 3	D8814	I - 3	D8819	N - 3	D8824	M - 3	D8829	M - 5	D8840	N - 4	Q8301	M - 1	Q8829	J - 4
D8300	N - 2	D8810	J - 3	D8815	J - 3	D8820	N - 4	D8825	M - 4	D8830	M - 5	IC		Q8302	N - 2	Q8835	N - 2
D8800	N - 4	D8811	I - 3	D8816	I - 3	D8821	N -3	D8826	N - 5	D8831	N - 5	IC8809	N - 2	Q8303	N - 2	Q8837	M - 5
D8801	N - 4	D8812	I - 3	D8817	I - 3	D8822	M - 3	D8827	M - 4	D8832	M -4	TRANSISTORS		Q8824	L - 3	Q9212	L - 5
D8802	N - 4	D8813	I - 3	D8818	I - 3	D8823	M - 4	D8828	M - 5	D8833	M - 5	Q8300	N - 1	Q8828	J - 4	Q9213	L - 5

~ F3 Printed Wiring Board Conductor side ~

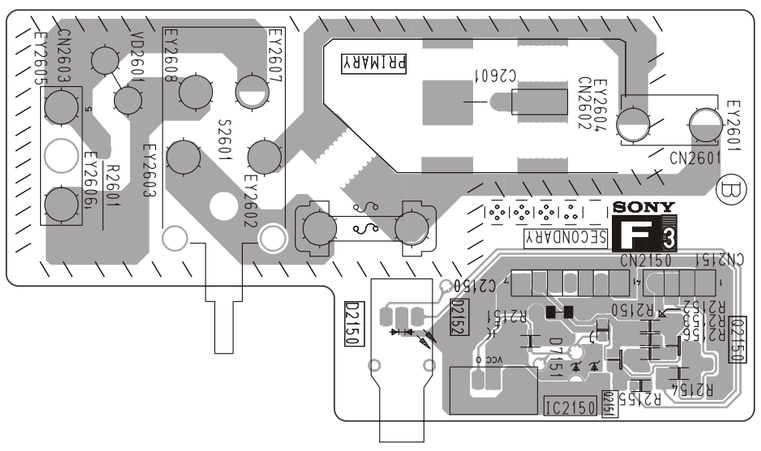

~ H3 Printed Wiring Board Conductor side ~

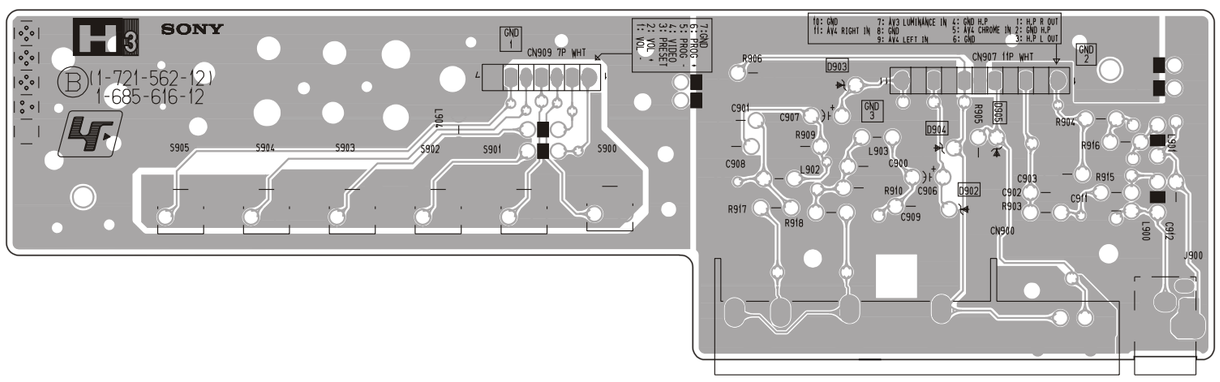

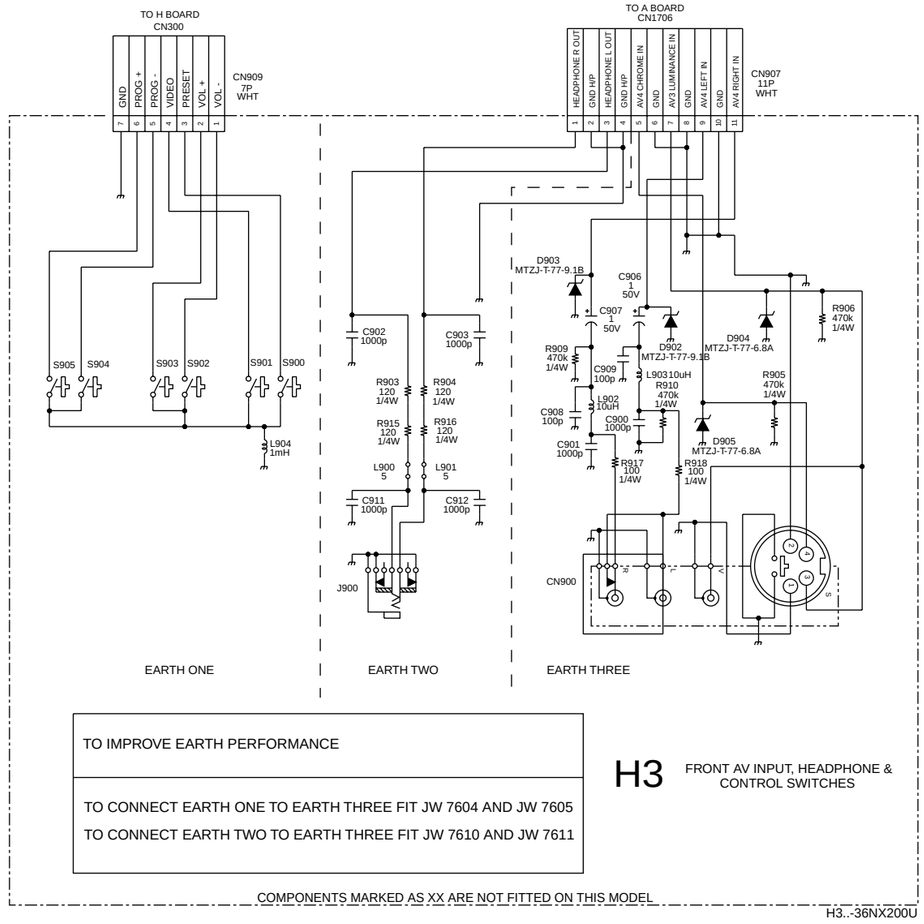

~ H3 Board Schematic Diagram [Front AV Input, Headphone and Control Switches] ~

J3..-36NX200U

COMPONENTS MARKED AS XX ARE NOT FITTED ON THIS MODEL

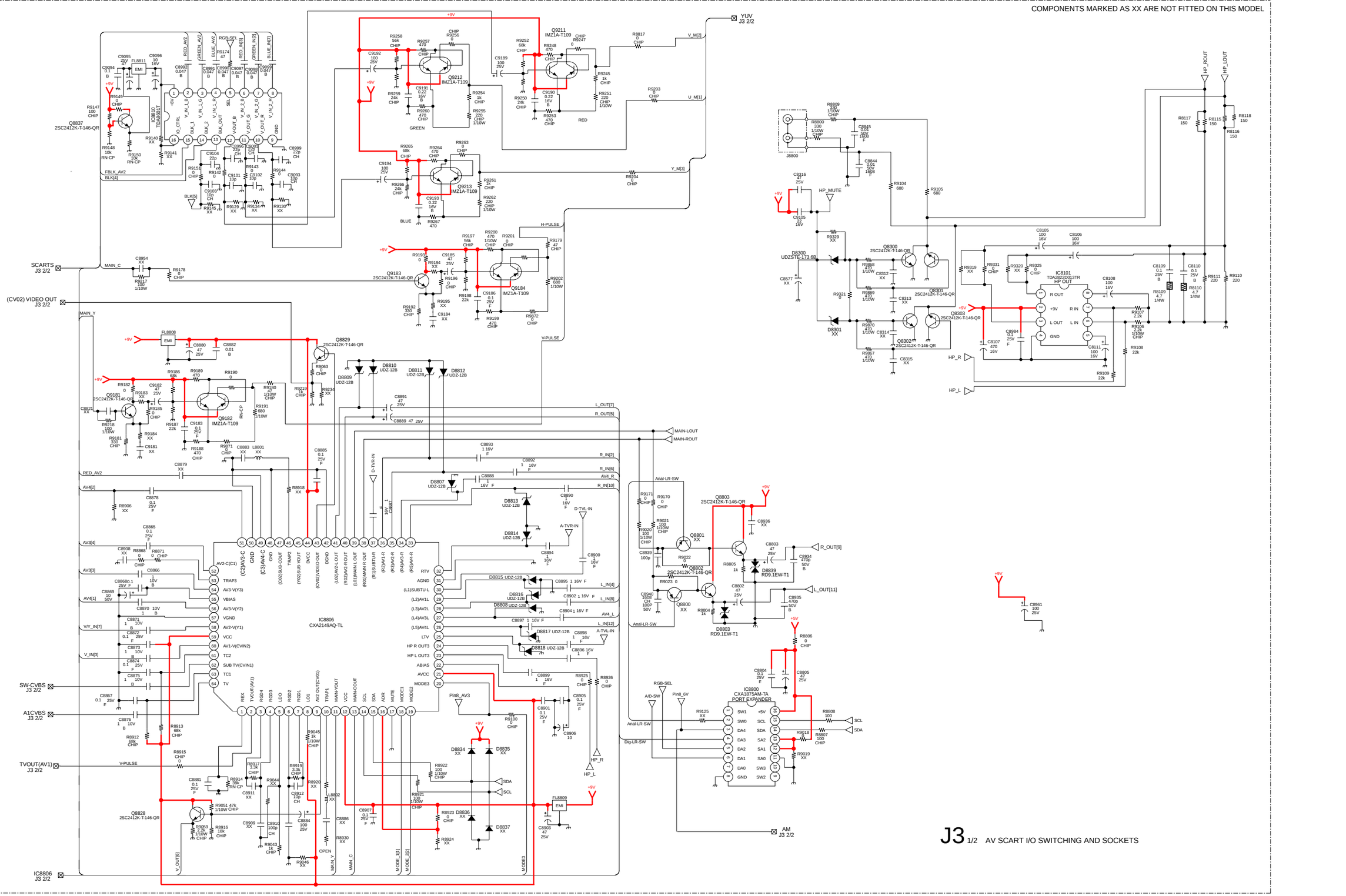

J3 1/2 AV SCART I/O SWITCHING AND SOCKETS

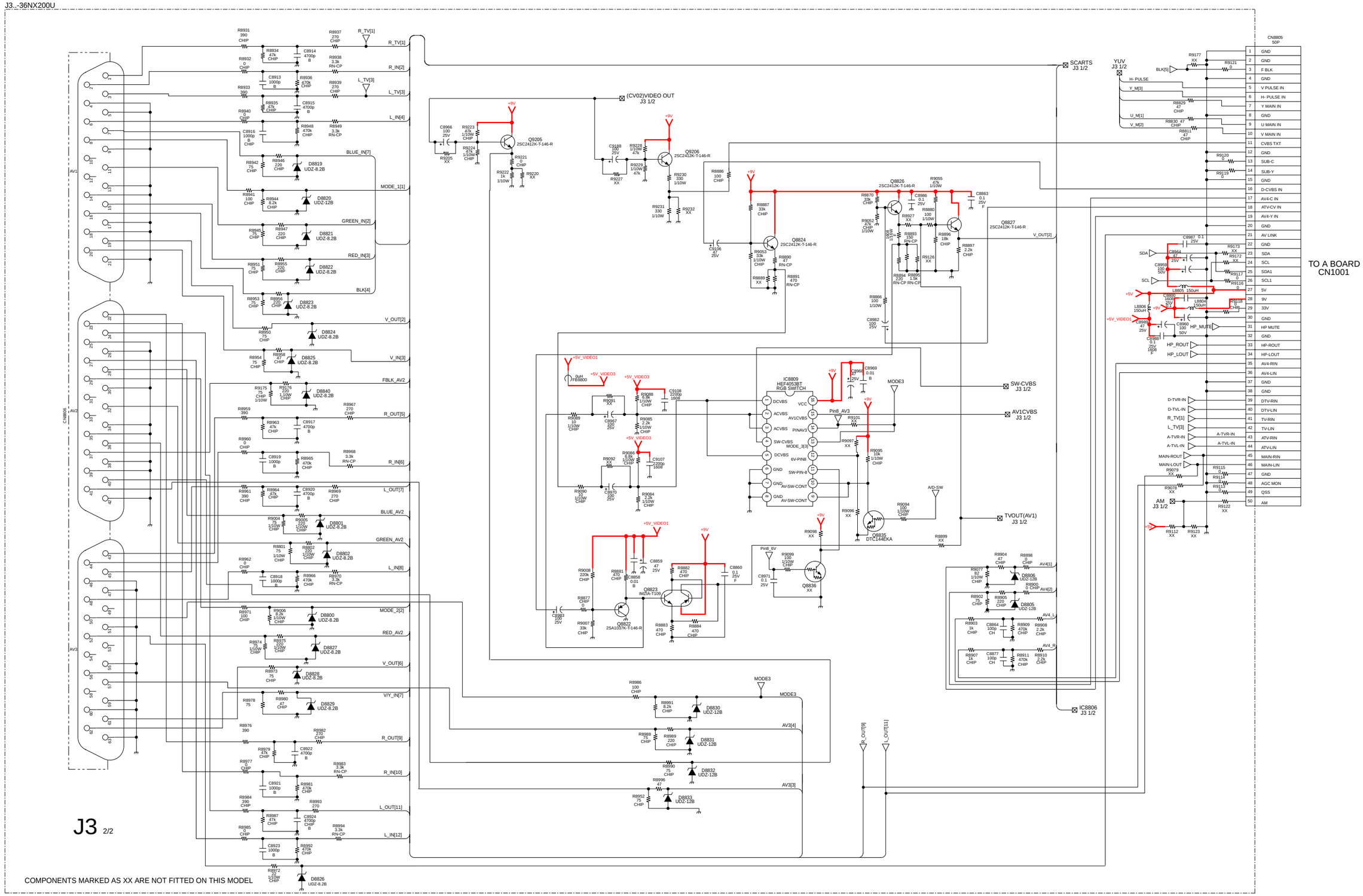

~ J3 Board Schematic Diagram [AV Scart Switching and Sockets] Page 2/2 ~

5-4. SEMICONDUCTORS

BA033T
BA05T
BA12T
SE-012N-LF4

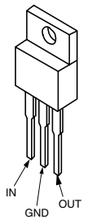

CXAB070AP
MCZ3001D

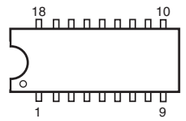

CXA1875AM-T4

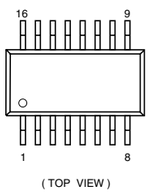

(TOP VIEW)

CXA1855Q
CXA2149AQ-TL
CXA2150AQ-TL
CXA2163AQ-T6

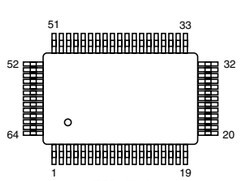

(TOP VIEW)

CXD2088Q-TX
CXD2095AQ
CXD2096Q
CXD2309Q-T6
CXD9509AQ
CXD9665Q
CXD2095AQ

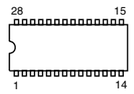

(TOP VIEW)

LA6500-FA

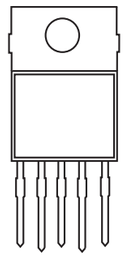

LM318P
LM358D
LM393DT
LM393N
M24C32-WMN6T(A)

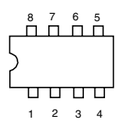

MB88141APF-ER

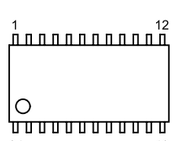

MSP3411G-QA-B10

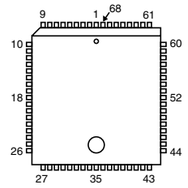

(TOP VIEW)

NJM2903M
NJM2904M
NJM3403AM
UPC4558G2

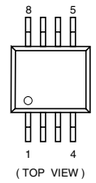

(TOP VIEW)

PQ1CG2032FZ

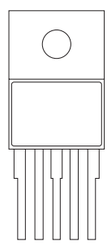

PST573IMT

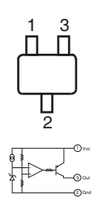

SBX3081-51(30)

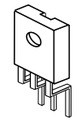

SE-135N
SE135N-LF4

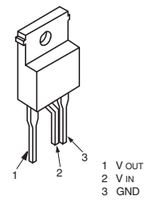

STV9379A

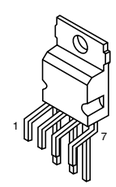

TCET1103G

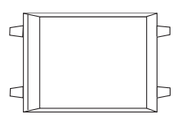

TC7SET04F(TE85R)
TC7SET08F(TE85L)
TC7SET08FU(TE85)

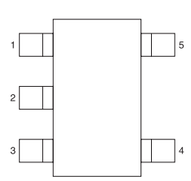

TDA6111Q/N4

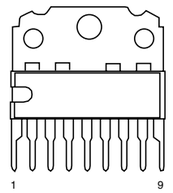

TDA7482

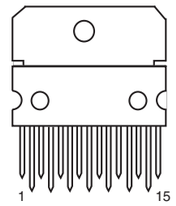

TLC2932IPWR
TLC2933IPWR-12

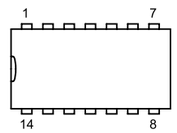

BA12T
BAO33T
IRFI644G-LF36
IRF614-005
IRF720-LF49
IRF620
SPA07N60C2-E8152
2SA1837
2SA2005
2SC5511

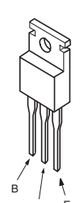

DTA144EKA
DTA144EKA-T146
DTC114EK
DTC114YKA-T146
DTC144EKA
2SA1162-G
2SA1037AK-T146
2SC1623-L5L6
2SC2412K-T-146
2SD601A-Q-TX

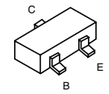

DTA144ESA
2SA933AS-QT
2SC2785-HFE

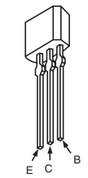

L7809CV/LSY
STP5NB40FP
STP5NB40(030Y)
2SC5698-CA
2S5696-SONY-CA

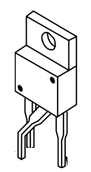

MSB709-RT1
MSD601-RST1
M1MA152WA-T1
UN2111
UN213
2SK2036(TE85L)

2SB733-34

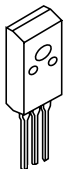

2SC2688(5)-LK

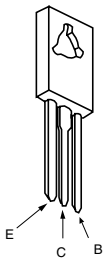

BAS316-115
DTZ-TT11-6.8B
MMDL914T1
UDZS-TE17-12B
UDZSTE-174.7B
UDZSTE-175.1B
UDZSTE-175.6B
UDZSTE-176.2B
UDZSTE-179.1B
UDZSTE-173.9B
UDZ-TE-17-7.5B

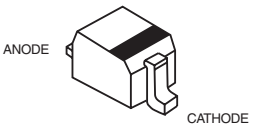

DAN202K

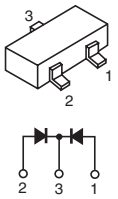

DAP202K

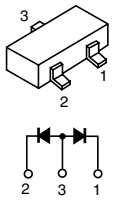

D1NL20U
D1NL20U-TR
D1NL40-TA2
D1NS4
EGP20G
EL1Z
GP08D
RGP10GPKG23
UF4005PKG23

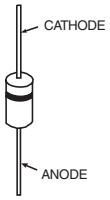

ERA22-08
ERA85-009
HZS9.1NB2
MTZJ-13B
MTZJ-33B
MTZJ-3.6A
MTZJ-30C
MTZJ-7.5B
MTZJ-T-77-15B
MTZJ-T-77-22
MTZJ-T-77-2.2A

RD15ES-B2
RD18ES-B2
RD5.1ESB2
RD5.6ESB2
RD6.8ESB2
RD8.2ESB3
1SS119-25
1SS133T-77
1SS355TE-17
1SS83

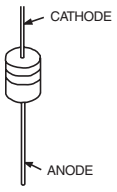

FBIU4D7M1-B
RBA-406B
S1VB40

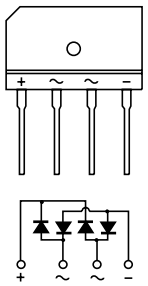

GS1B460/45

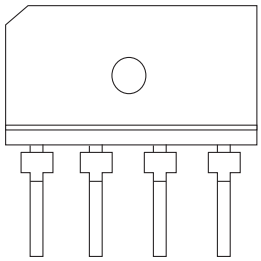

L-59SRSGC-CC

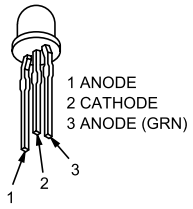

MA3062M-TX
RD5.1M-B2

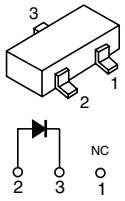

MA73-TX

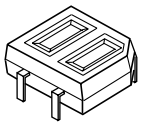

5-5 IC BLOCK DIAGRAMS

J3 BOARD IC8810 TDA8601T

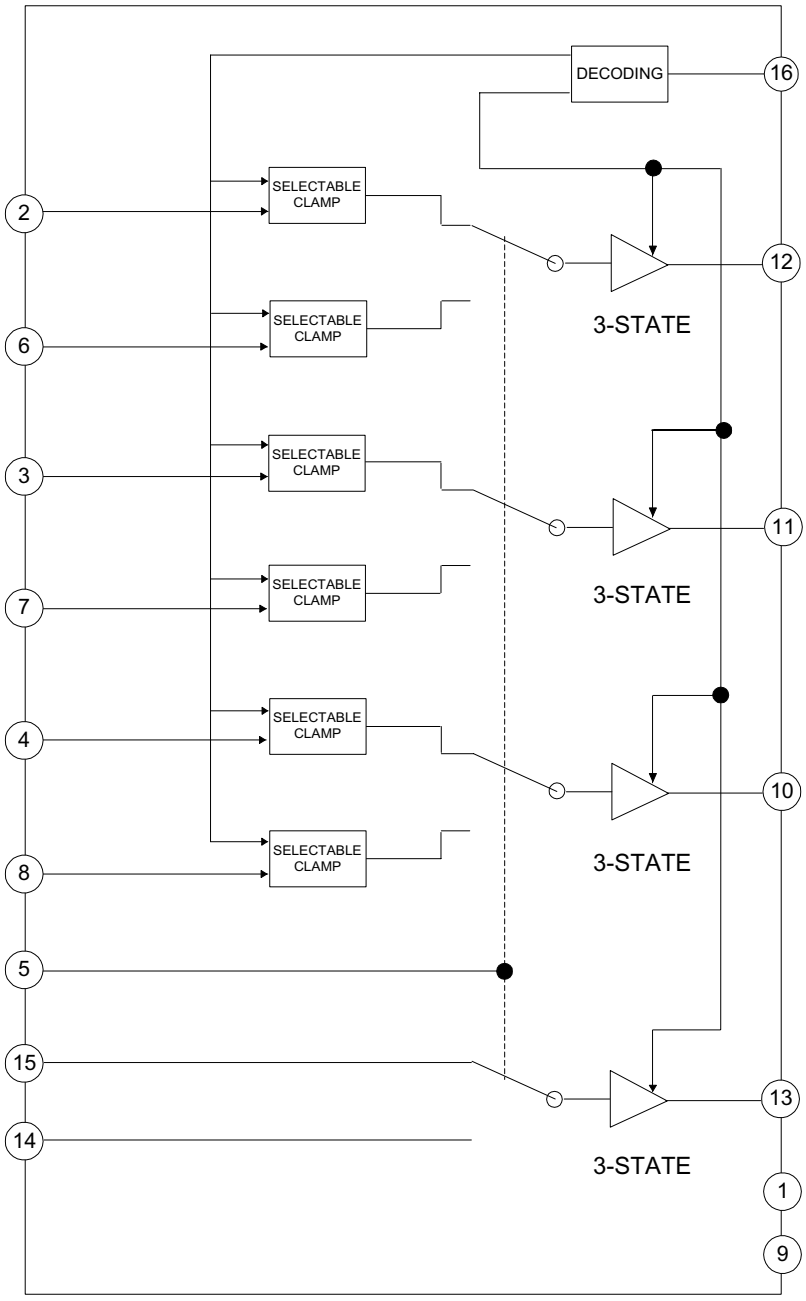

G BOARD IC6001 MCZ3001D
D2 BOARD IC6800 MCZ3001D

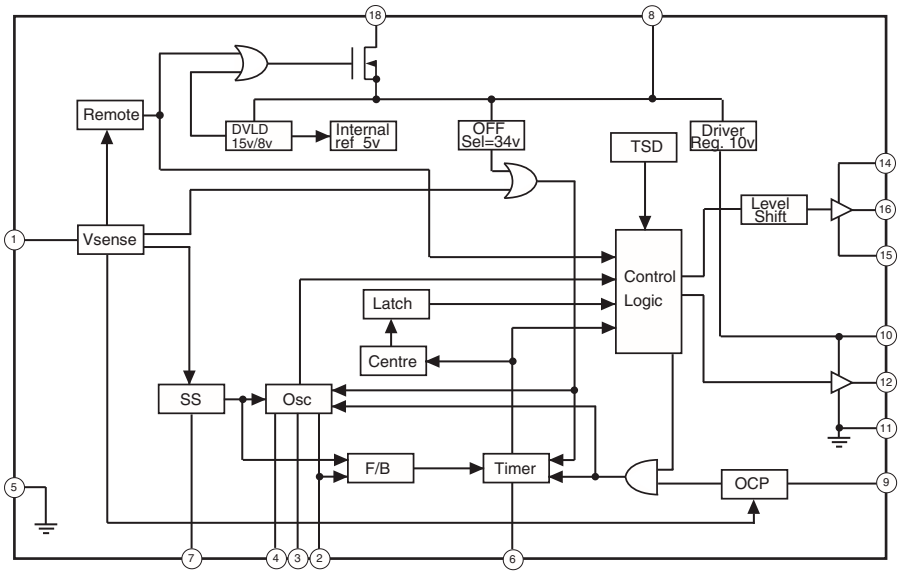

A BOARD IC1231 MSP3411G

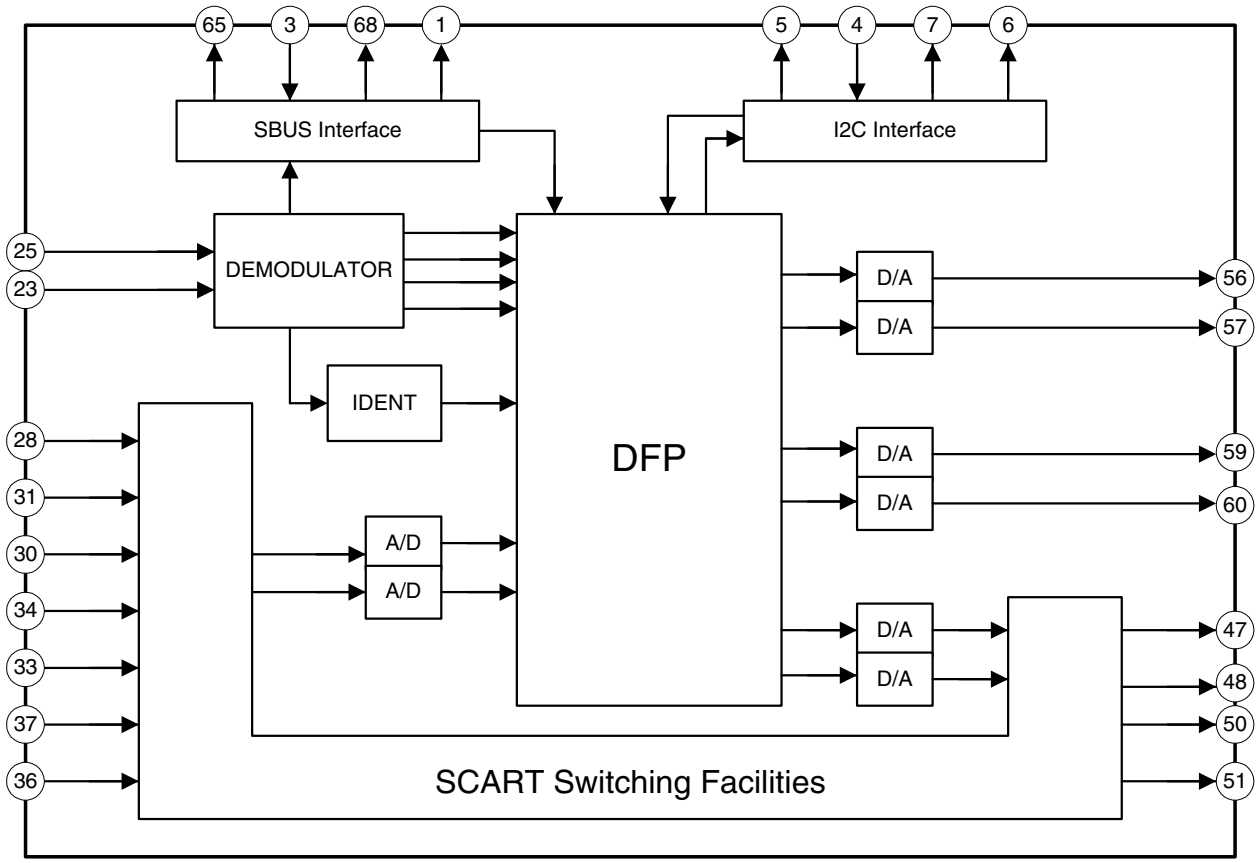

G BOARD IC6003 SE135N-LF4

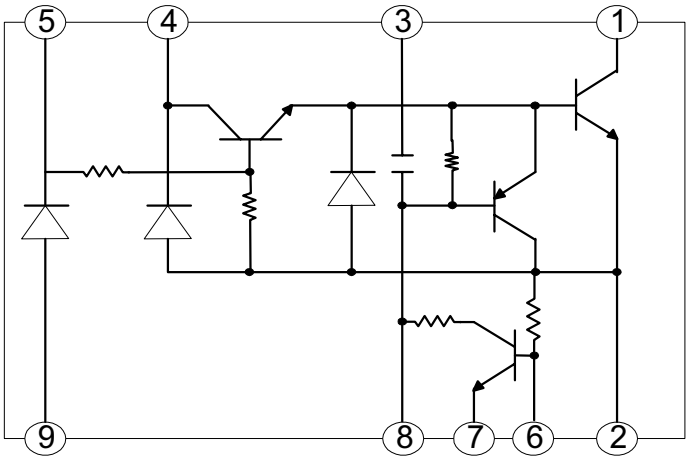

A BOARD IC1801/IC1804/IC1808 LM393DT

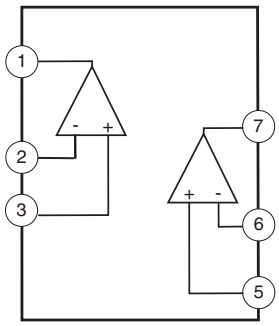

A BOARD IC1701 STV9379

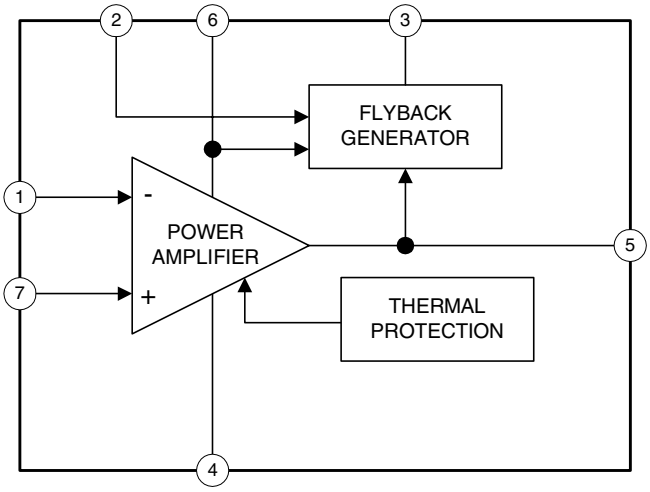

A BOARD IC1802 LM358

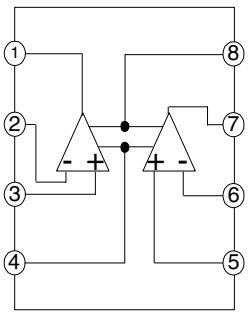

A BOARD IC1002/IC1003/IC1006/IC1007/IC1010 PQ1CG2032FZ

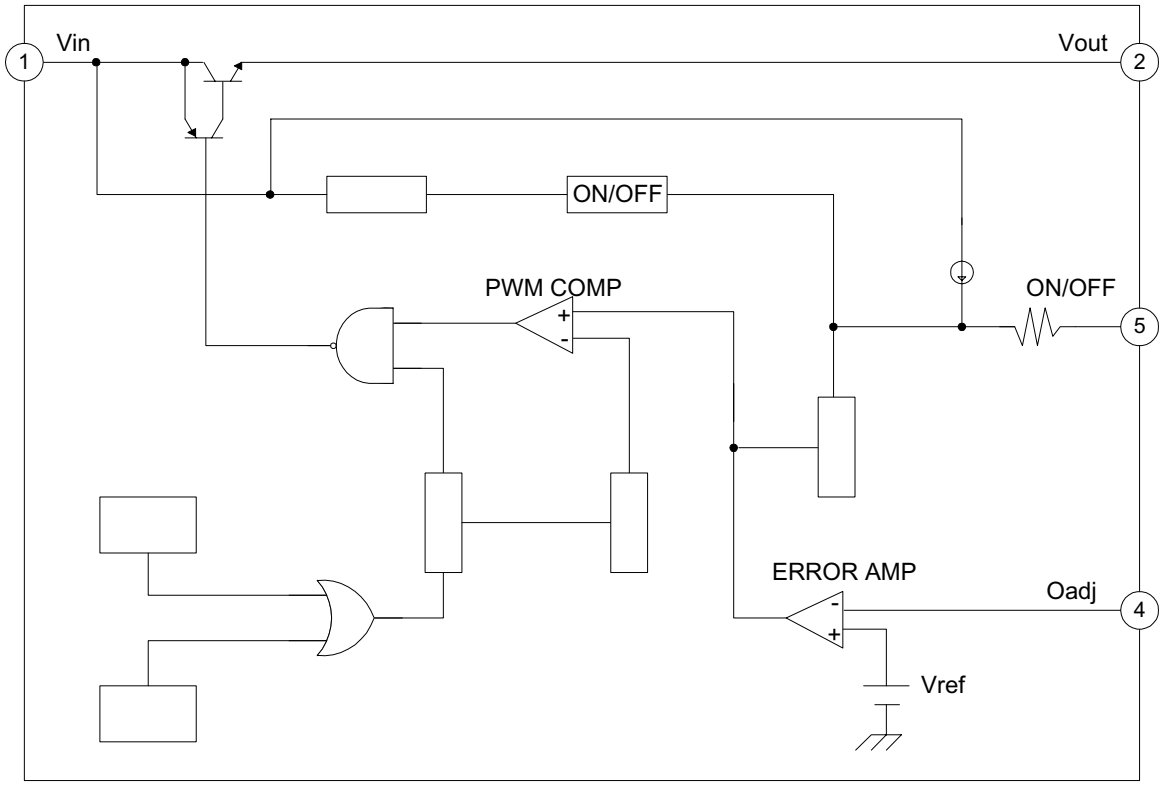

A BOARD IC1012/IC1812 BA033T/BA12T

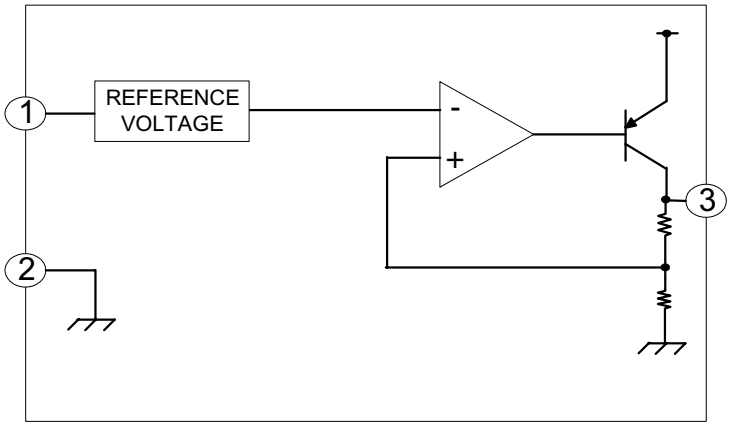

D2 BOARD IC6801/IC6802 NJM2903/NJM2904

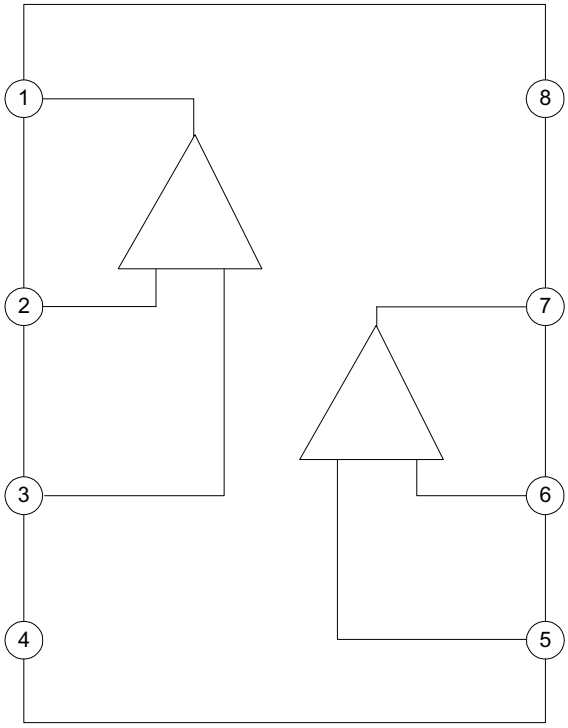

D2 BOARD IC6803/IC6807 TLV431

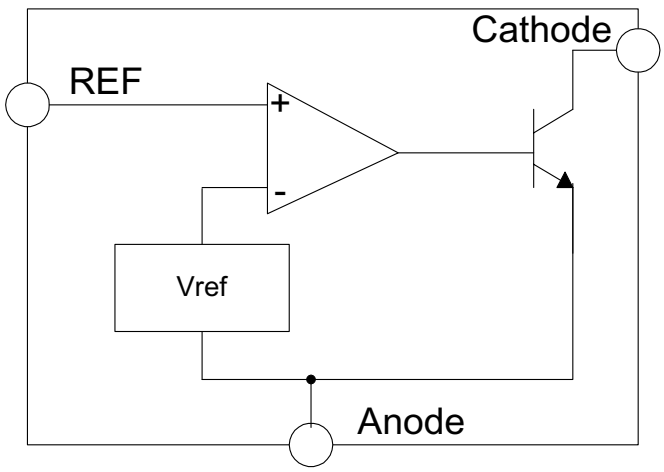

SECTION 6
EXPLODED VIEWS

Note : Les composants indentifies par une trame et par une marque ⚠ sonte d'une importance critique pour la securite. Ne les remplacer que par des pieces du numero specifie.

Note : The components identified by shading and marked ⚠ are critical for safety. Replace only with the part numbers specified in the parts list.

NOTE :

- Items with no part number and no description are not stocked because they are seldom required for routine service.
- The construction parts of an assembled part are indicated with a collation number in the remarks column.
- Items marked "*" are not stocked since they are seldom required for routine service. Some delay should be anticipated when ordering these items.

6-1. CHASSIS

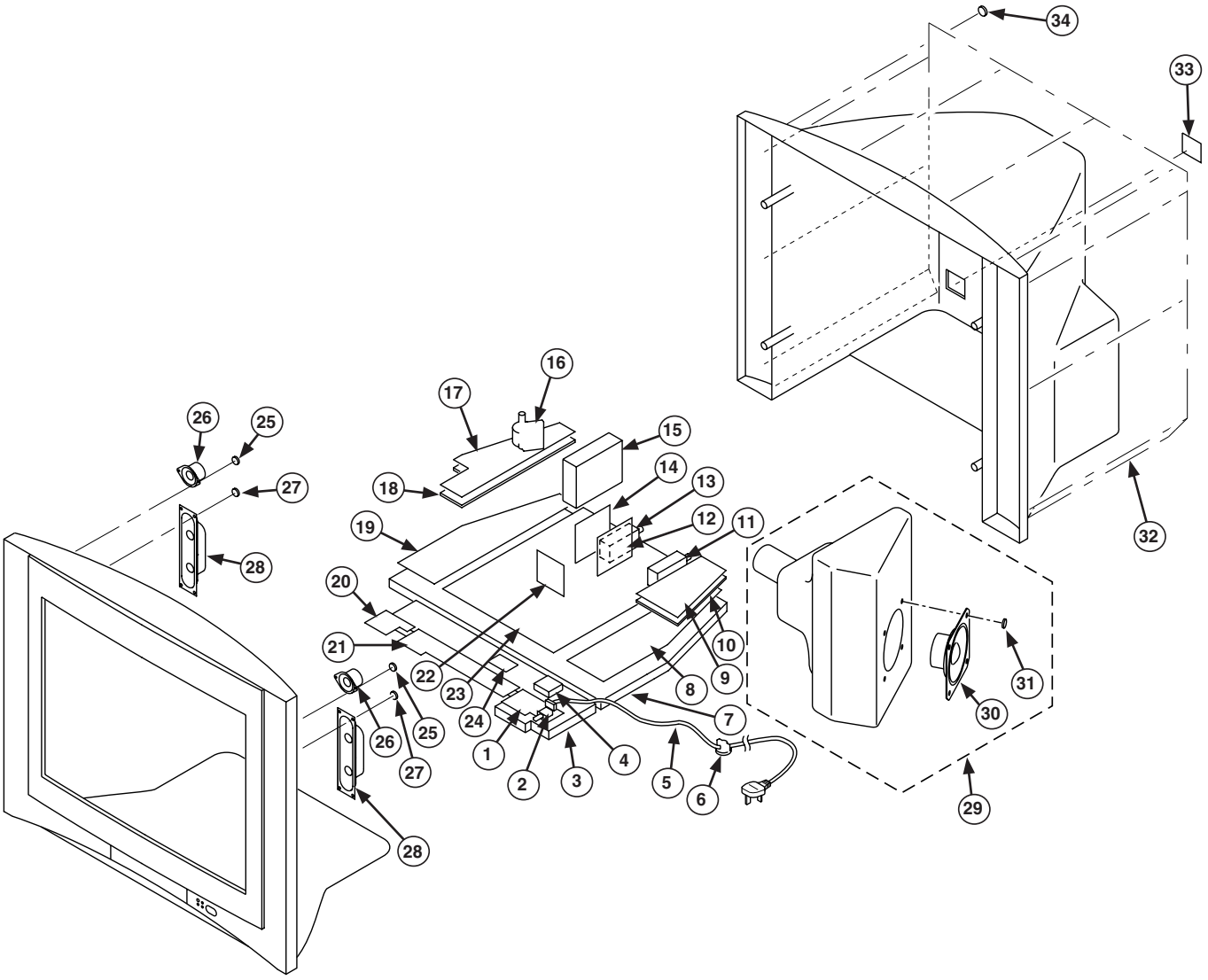

REF.NO.		PART.NO	DESCRIPTION	REMARK
1		*A-1401-053-A	F3 BOARD, COMPLETE	
2	⚠	1-571-433-21	SWITCH, PUSH (AC POWER)	
3		*4-087-550-02	BRACKET H	
4		1-424-855-11	COIL, CHOKE 29MMH	
5	⚠	1-792-592-11	CORD, PLUG WITH POWER	
6		*4-202-531-01	AC CORD LOCK (SC)	
7		*4-206-106-41	BRACKET, (MAIN)	
8		*A-1300-687-A	G BOARD, COMPLETE	
9		*A-1636-052-A	G1 BOARD, COMPLETE	
10		*4-206-383-02	BRACKET, G1	
11		8-598-529-10	FRONTEND BTF-EU611	
12		*A-1401-380-A	J3 BOARD, COMPLETE	
13		8-598-585-00	FRONT END BTD-DU604	
14		*A-1300-686-A	B5 BOARD, COMPLETE	
15		X-4200-759-4	SHIELD N ASSY	
16	⚠	1-453-444-21	TRANSFORMER ASSY, FLYBACK (NX-6020//Z2B4)	
17		*A-1300-284-A	D2 BOARD, COMPLETE	
18		*4-087-469-11	BRACKET, D2	
19		*A-1300-285-A	D1 BOARD, COMPLETE	
20		*A-1304-241-A	MS2 BOARD, COMPLETE	
21		*A-1400-475-A	H3 BOARD, COMPLETE	
22		*A-1401-432-A	M2 BOARD, COMPLETE	
23		*A-1401-378-A	A BOARD, COMPLETE	
24		*A-1401-265-A	H BOARD, COMPLETE	
25		7-685-648-79	SCREW, +BVTP 3X12 TYPE 2 IT-3	
26		1-542-437-11	SPEAKER (2CM)	
27		7-685-663-71	SCREW, +BVTP 4X16 TYPE 2 IT-3	
28		1-825-177-11	LOUDSPEAKER (4.2X24CM)	
29		A-1601-904-A	WOOFER ASSY	30-31
30		1-825-213-11	LOUDSPEAKER (10CM)	
31		7-685-661-14	SCREW + BVTP 4X12 TYPE 2 IT-3	
32		*4-087-538-11	REAR COVER	
33		4-206-493-01	PCMCIA COVER	
34		4-384-096-01	SCREW (4X16) TAPPING, +P	

6-2. PICTURE TUBE

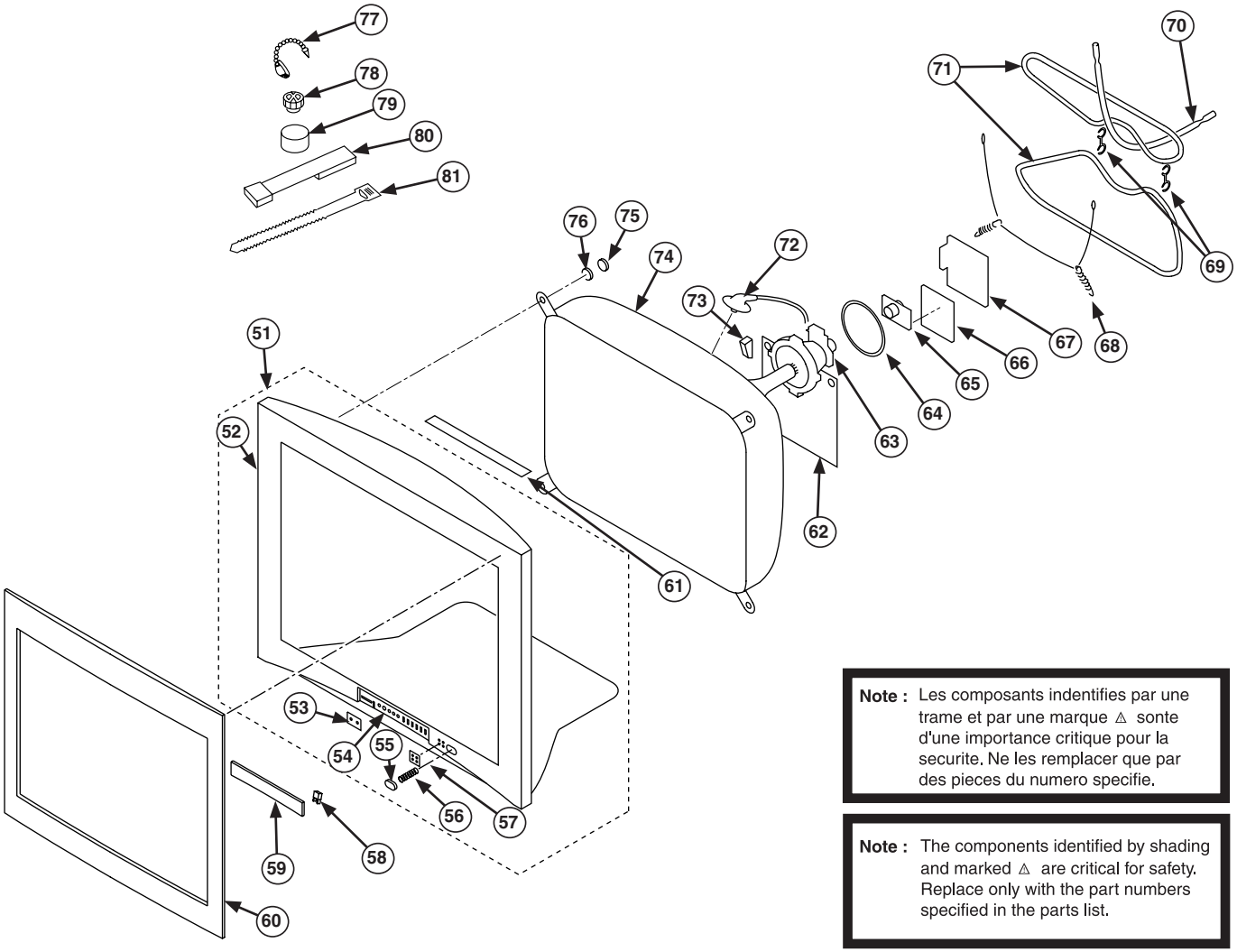

Note : Les composants indentifies par une trame et par une marque ⚠ sonte d'une importance critique pour la securite. Ne les remplacer que par des pieces du numero specifie.

Note : The components identified by shading and marked ⚠ are critical for safety. Replace only with the part numbers specified in the parts list.

REF.NO.		PART.NO	DESCRIPTION	REMARK
51		X-4039-966-4	CABINET ASSY	52-57
52		4-087-526-02	CABINET	
53		4-087-528-01	M/S GUIDE LIGHT	
54		4-087-533-01	MULTI BUTTON	
55		4-087-527-01	POWER BUTTON	
56		4-204-426-01	SPRING	
57		4-087-530-01	GUIDE, LIGHT	
58		4-083-848-02	DAMPER, DOOR	
59		4-087-552-11	DOOR	
60		X-4039-965-2	BEZEL ASSY	
61		4-203-128-31	SHEET, BLOTTING	
62		4-089-825-01	DY SHIELD	
63	⚠	8-451-507-32	DEFLECTION YOKE (Y36RVC2-M3)	
64		1-452-896-11	COIL, NA ROTATION (RT200)	
65	⚠	8-453-007-31	NECK ASSY, (NA324-M3)	
66		*A-1401-267-A	VM BOARD, COMPLETE	
67		*A-1401-264-A	C1 BOARD, COMPLETE	
68		4-065-852-01	SPRING, EXTENSION	
69		4-089-227-01	DGC CLIP	
70		4-067-455-01	BAND, DGC	
71	⚠	1-428-963-11	DEGAUSSING COIL	
72	⚠	1-251-946-11	CAP ASSY, HIGH-VOLTAGE	
73		4-203-658-01	SPACER, DY	
74	⚠	8-735-061-05	PICTURE TUBE (W86LPH010X)	
75		4-080-811-01	SCREW, TAPPING 7+CROWN WASHER	
76		4-083-843-01	ACTIVE SPACER, CRT	
77		4-308-870-00	CLIP, LEAD WIRE	
78		1-452-094-00	MAGNET, ROTATABLE DISK; 15MM	
79		1-452-032-00	MAGNET, DISK; 10MM	
80		X-4387-214-1	PERMALLOY ASSY, CORRECTION	
81		3-701-007-00	BAND, BINDING	

SECTION 7
ELECTRICAL PARTS LIST

PARTS LISTING TABLE OF CONTENTS

	Page
D2 BOARD COMPLETE Parts List :	82
D1 BOARD COMPLETE Parts List :	84
B5 BOARD COMPLETE Parts List :	86
G BOARD COMPLETE Parts List :	94
MS2 BOARD COMPLETE Parts List :	95
H3 BOARD COMPLETE Parts List :	96
F3 BOARD COMPLETE Parts List :	97
C1 BOARD COMPLETE Parts List :	97
H BOARD COMPLETE Parts List :	99
A BOARD COMPLETE Parts List :	99
J3 BOARD COMPLETE Parts List :	110
M2 BOARD COMPLETE Parts List :	115
VM BOARD COMPLETE Parts List :	117
G1 BOARD COMPLETE Parts List :	118
MISCELLANEOUS :	119
ACCESSORIES AND PACKAGING MATERIALS :	119
REMOTE COMMANDER :	119

Note : Refer to the designated variant parts list when seeking a part indicated by an asterisk (*)
Parts indicated (XX) on the Schematic Diagram are not used in this model and therefore do not appear in the Parts List.

* A-1300-284-A D2 Board, Complete

REF.NO.	PART.NO	DESCRIPTION			REMARK
	3-710-578-01	COVER, VOLUME, 6 MOLD			
	4-382-854-01	SCREW (M3X8), P, SW (+)			
		< CAPACITOR >			
C6802	1-130-483-00	MYLAR	0.01UF	5.00% 50V	
C6803	1-165-176-11	CERAMIC CHIP	0.047UF	10.00% 16V	
C6804	1-136-813-11	FILM	680PF	5.00% 100V	
C6805	1-126-964-11	ELECT	10UF	20.00% 50V	
C6806	1-128-551-11	ELECT	22UF	20.00% 63V	
C6807	1-130-495-00	MYLAR	0.1UF	5.00% 50V	
C6808	1-126-947-11	ELECT	47UF	20.00% 35V	
C6809	1-162-966-11	CERAMIC CHIP	0.0022UF	10.00% 50V	
C6810	1-162-115-00	CERAMIC	330PF	10.00% 1KV	
C6811	1-162-115-00	CERAMIC	330PF	10.00% 1KV	
C6812	1-135-946-21	FILM	47000PF	3% 800V	
C6813	1-126-967-11	ELECT	47UF	20.00% 50V	
C6814	1-126-947-11	ELECT	47UF	20.00% 35V	
C6815	1-130-483-00	MYLAR	0.01UF	5.00% 50V	
C6816	1-126-964-11	ELECT	10UF	20.00% 50V	
C6820	1-130-495-00	MYLAR	0.1UF	5.00% 50V	
C6821	1-126-964-11	ELECT	10UF	20.00% 50V	
C6822	1-126-966-11	ELECT	33UF	20.00% 50V	
C6823	1-126-933-11	ELECT	100UF	20.00% 16V	
C6824	1-113-610-11	ELECT(BLOCK)	220UF	20.00% 250V	
C6825	1-130-495-00	MYLAR	0.1UF	5.00% 50V	
C6826	1-126-969-11	ELECT	220UF	20.00% 50V	
C6827	1-163-021-91	CERAMIC CHIP	0.01UF	10.00% 50V	
C6834	1-162-970-11	CERAMIC CHIP	0.01UF	10.00% 25V	
C6835	1-127-715-91	CERAMIC CHIP	0.22UF	10% 16V	
C6836	1-136-165-00	FILM	0.1UF	5.00% 50V	
C6837	1-136-103-00	FILM	0.1UF	5.00% 200V	
C6840	1-130-495-00	MYLAR	0.1UF	5.00% 50V	
C6842	1-130-471-00	MYLAR	0.001UF	5.00% 50V	
C6843	1-135-945-21	FILM	10000PF	3% 800V	
C6848	1-126-963-11	ELECT	4.7UF	20.00% 50V	
C6849	1-162-962-11	CERAMIC CHIP	470PF	10.00% 50V	
C6850	1-107-826-11	CERAMIC CHIP	0.1UF	10.00% 16V	
C6851	1-107-826-11	CERAMIC CHIP	0.1UF	10.00% 16V	
C6852	1-162-970-11	CERAMIC CHIP	0.01UF	10.00% 25V	
C6853	1-126-933-11	ELECT	100UF	20.00% 16V	
C8929	1-107-960-11	ELECT	4.7UF	20.00% 250V	
C8930	1-129-898-00	FILM	0.0022UF	5.00% 630V	
C8932	1-136-205-11	MYLAR	0.022UF	5.00% 630V	
C8938	1-162-131-11	CERAMIC	220PF	10.00% 2KV	
C8939	1-162-129-00	CERAMIC	150PF	10.00% 2KV	
C8944	1-137-150-11	FILM	0.01UF	5.00% 100V	
C8945	1-126-947-11	ELECT	47UF	20.00% 35V	

REF.NO.	PART.NO	DESCRIPTION	REMARK
		< CONNECTOR >	
CN6800	*1-816-979-11	PLUG, CONNECTOR 8P	
CN6801	1-691-772-11	PLUG (MICRO CONNECTOR) 10P	
		< DIODE >	
D6800	8-719-052-90	DIODE D1NL40-TA2	
D6801	8-719-110-41	DIODE RD15ESB2	
D6802	8-719-110-41	DIODE RD15ESB2	
D6803	8-719-911-19	DIODE 1SS119-25	
D6804	8-719-081-97	DIODE MMDL914T1	
D6806	8-719-109-85	DIODE RD5.1ESB2	
D6811	8-719-911-19	DIODE 1SS119-25	
D6813	8-719-911-19	DIODE 1SS119-25	
D6814	8-719-982-21	DIODE MTZJ-30C	
D6815	8-719-911-19	DIODE 1SS119-25	
D6816	8-719-110-41	DIODE RD15ESB2	
D6817	8-719-063-73	DIODE D1NL20U-TR	
D6820	8-719-921-63	DIODE MTZJ-7.5B	
D6821	8-719-110-49	DIODE RD18ESB2	
D6822	8-719-063-73	DIODE D1NL20U-TR	
D6823	8-719-911-19	DIODE 1SS119-25	
D6824	8-719-911-19	DIODE 1SS119-25	
D6825	8-719-911-19	DIODE 1SS119-25	
D6828	8-719-911-19	DIODE 1SS119-25	
D8919	8-719-948-45	DIODE ERA22-08	
D8927	8-719-991-33	DIODE 1SS133T-77	
		< FERRITE BEAD >	
FB6801	1-412-911-11	FERRITE 0UH	
		< IC >	
IC6800	8-759-670-30	IC MCZ3001D	
IC6801	8-759-700-07	IC NJM2903M	
IC6802	8-759-701-01	IC NJM2904M	
IC6803	8-759-462-09	IC TLV431AIDBV	
IC6807	8-759-586-17	IC TL1431CZ-AP	
		< COIL >	
L6802	1-419-658-11	INDUCTOR 107UH	
L8901	1-406-674-11	INDUCTOR 3.3MH	
		< TRANSISTOR >	
Q6801	8-729-901-81	TRANSISTOR 2SC2412K-T-146-R	
Q6802	8-729-901-81	TRANSISTOR 2SC2412K-T-146-R	
Q6803	8-729-120-28	TRANSISTOR 2SC1623-L5L6	
Q6804	8-729-044-42	TRANSISTOR IRFI644G-LF36	
Q6805	8-729-044-42	TRANSISTOR IRFI644G-LF36	
Q6807	8-729-120-28	TRANSISTOR 2SC1623-L5L6	

Note : The components identified by shading and marked ⚠ are critical for safety. Replace only with the part numbers specified in the parts list.

REF.NO.	PART.NO	DESCRIPTION			REMARK
Q6808	8-729-120-28	TRANSISTOR 2SC1623-L5L6			
Q6813	8-729-424-02	TRANSISTOR 2SB709A-QRS-TX			
Q6814	8-729-900-53	TRANSISTOR DTC114EK			
Q6815	8-729-424-02	TRANSISTOR 2SB709A-QRS-TX			
Q6816	8-729-900-53	TRANSISTOR DTC114EK			
Q6817	8-729-424-02	TRANSISTOR 2SB709A-QRS-TX			
Q8909	6-550-012-01	TRANSISTOR STP5NB40(033Y)			
Q8918	1-801-806-11	TR DTC144EKA			
		< RESISTOR >			
R6801	1-216-841-11	METAL CHIP	47K	5%	1/10W
R6802	1-216-849-11	METAL CHIP	220K	5%	1/10W
R6803	1-216-829-11	METAL CHIP	4.7K	5%	1/10W
R6805	1-215-481-00	METAL	330K	1%	1/4W
R6806	1-215-481-00	METAL	330K	1%	1/4W
R6807	1-215-481-00	METAL	330K	1%	1/4W
R6808	1-211-981-11	METAL CHIP	33	0.5%	1/10W
R6809	1-218-823-11	METAL CHIP	100	0.5%	1/10W
R6810	1-249-417-11	CARBON	1K	5%	1/4W
R6811	1-202-933-61	FUSIBLE	0.1	10%	1/2W
R6812	1-218-869-11	METAL CHIP	8.2K	0.5%	1/10W
R6813	1-249-393-11	CARBON	10	5%	1/4W
R6814	1-249-393-11	CARBON	10	5%	1/4W
R6815	1-216-833-11	METAL CHIP	10K	5%	1/10W
R6816	1-216-833-11	METAL CHIP	10K	5%	1/10W
R6817	1-243-979-21	METAL OXIDE	0.1	5%	2W
R6818	1-249-389-11	CARBON	4.7	5%	1/4W
R6820	1-216-837-11	METAL CHIP	22K	5%	1/10W
R6821	1-216-837-11	METAL CHIP	22K	5%	1/10W
R6823	1-247-843-11	CARBON	3.3K	5%	1/4W
R6825	1-218-899-11	METAL CHIP	150K	0.5%	1/16W
R6827	1-218-887-11	METAL CHIP	47K	0.5%	1/10W
R6828	1-218-895-11	METAL CHIP	100K	0.5%	1/10W
R6829	1-216-841-11	METAL CHIP	47K	5%	1/10W
R6832	1-216-841-11	METAL CHIP	47K	5%	1/10W
R6834	1-216-841-11	METAL CHIP	47K	5%	1/10W
R6835	1-215-423-00	METAL	1.2K	1%	1/4W
R6836	1-215-441-00	METAL	6.8K	1%	1/4W
R6837	1-215-441-00	METAL	6.8K	1%	1/4W
R6838	1-215-437-00	METAL	4.7K	1%	1/4W
R6839	1-215-439-00	METAL	5.6K	1%	1/4W
R6840	1-215-445-00	METAL	10K	1%	1/4W
R6841	1-218-841-11	METAL CHIP	560	0.5%	1/10W
R6843	1-218-845-11	METAL CHIP	820	0.5%	1/10W
R6844	1-218-875-11	METAL CHIP	15K	0.5%	1/10W
R6845	1-218-855-11	METAL CHIP	2.2K	0.5%	1/10W
R6846	1-218-868-11	METAL CHIP	7.5K	0.5%	1/10W
R6847	1-218-847-11	METAL CHIP	1K	0.5%	1/10W
R6848	1-216-817-11	METAL CHIP	470	5%	1/10W
R6865	1-216-835-11	METAL CHIP	15K	5%	1/10W
R6867	1-216-809-11	METAL CHIP	100	5%	1/10W
R6868	1-216-797-11	METAL CHIP	10	5%	1/10W
R6869	1-216-833-11	METAL CHIP	10K	5%	1/10W
R6870	1-216-849-11	METAL CHIP	220K	5%	1/10W
R6872	1-249-377-11	CARBON	0.47	5%	1/4W
R6873	1-249-431-11	CARBON	15K	5%	1/4W
R6874	1-218-903-11	METAL CHIP	220K	0.5%	1/10W
R6875	1-216-863-11	METAL CHIP	3.3M	5%	1/10W
R6876	1-215-485-00	METAL	470K	1%	1/4W
R6877	1-215-485-00	METAL	470K	1%	1/4W
R6878	1-216-821-11	METAL CHIP	1K	5%	1/10W
R6880	1-219-751-51	METAL	47K	5%	1/2W
R6881	1-219-749-51	METAL	10K	5%	1/2W
R6882	1-216-841-11	METAL CHIP	47K	5%	1/10W
R6883	1-211-985-11	METAL CHIP	47	0.5%	1/10W
R6884	1-218-874-11	METAL CHIP	13K	0.5%	1/10W
R6885	1-216-841-11	METAL CHIP	47K	5%	1/10W
R6887	1-249-411-11	CARBON	330	5%	1/4W
R6895	1-216-809-11	METAL CHIP	100	5%	1/10W
R6896	1-216-839-11	METAL CHIP	33K	5%	1/10W
R6897	1-216-853-11	METAL CHIP	470K	5%	1/10W
R6899	1-216-839-11	METAL CHIP	33K	5%	1/10W
R8949	1-215-922-11	METAL OXIDE	6.8K	5%	3W
R8950	1-215-922-11	METAL OXIDE	6.8K	5%	3W
R8951	1-215-922-11	METAL OXIDE	6.8K	5%	3W
R8952	1-215-922-11	METAL OXIDE	6.8K	5%	3W
R8954	1-260-123-11	CARBON	100K	5%	1/2W
R8955	1-260-123-11	CARBON	100K	5%	1/2W
R8956	1-260-123-11	CARBON	100K	5%	1/2W
R8957	1-218-847-11	METAL CHIP	1K	0.5%	1/10W
R8988	1-260-123-11	CARBON	100K	5%	1/2W
R8989	1-249-429-11	CARBON	10K	5%	1/4W
R8990	1-216-845-11	METAL CHIP	100K	5%	1/10W
R8991	1-216-837-11	METAL CHIP	22K	5%	1/10W
R8998	1-215-922-11	METAL OXIDE	6.8K	5%	3W
		< RESISTOR VARIABLE >			
RV6800	1-241-763-11	RES, ADJ, CERMET 4.7K			
		< SPARK GAP >			
SG6800	1-517-499-21	GAP, SPARK			
		< TRANSFORMER >			
T6800 ⚠	1-453-444-21	TRANSFORMER ASSY, FLYBACK (NX-6020//Z2B4)			
T8901	1-437-690-11	TRANSFORMER, FERRITE (DFT)			

* A-1300-285-A D1 Board, Complete

4-382-854-01 SCREW (M3X8), P, SW (+)

< CAPACITOR >

REF.NO.	PART.NO	DESCRIPTION		REMARK
C8100	1-126-960-11	ELECT	1UF	20.00% 50V
C8101	1-162-962-11	CERAMIC CHIP	470PF	10.00% 50V
C8102	1-102-030-00	CERAMIC	330PF	10.00% 500V
C8104	1-106-383-00	MYLAR	0.047UF	10.00% 200V
C8105	1-126-960-11	ELECT	1UF	20.00% 50V
C8106	1-162-962-11	CERAMIC CHIP	470PF	10.00% 50V
C8107	1-102-030-00	CERAMIC	330PF	10.00% 500V
C8109	1-106-383-00	MYLAR	0.047UF	10.00% 200V
C8110	1-107-444-11	CERAMIC	100PF	5.00% 2KV
C8111	1-162-134-11	CERAMIC	470PF	10.00% 2KV
C8112	1-117-843-31	FILM	13000PF	3.00% 1.5KV
C8113	1-117-838-31	FILM	8200PF	3.00% 1.5KV
C8114	1-125-893-11	FILM	680PF	3.00% 1.5KV
C8115	1-125-893-11	FILM	680PF	3.00% 1.5KV
C8116	1-127-681-11	FILM	10000PF	2% 100V
C8117	1-109-844-11	FILM	0.68UF	5.00% 400V
C8118	1-107-846-11	FILM	0.1UF	5.00% 400V
C8119	1-117-665-11	FILM	0.33UF	5.00% 250V
C8120	1-117-664-11	FILM	0.27UF	5.00% 250V
C8121	1-107-846-11	FILM	0.1UF	5.00% 400V
C8122	1-162-964-11	CERAMIC CHIP	0.001UF	10.00% 50V
C8200	1-123-024-21	ELECT	33UF	160V
C8201	1-107-656-11	ELECT	100UF	20.00% 250V
C8202	1-102-228-00	CERAMIC	470PF	10.00% 500V
C8203	1-102-228-00	CERAMIC	470PF	10.00% 500V
C8204	1-102-228-00	CERAMIC	470PF	10.00% 500V
C8205	1-126-941-11	ELECT	470UF	20.00% 25V
C8206	1-126-941-11	ELECT	470UF	20.00% 25V
C8208	1-104-665-11	ELECT	100UF	20.00% 25V
C8209	1-104-665-11	ELECT	100UF	20.00% 25V
C8304	1-104-666-11	ELECT	220UF	20.00% 25V
C8305	1-164-156-11	CERAMIC CHIP	0.1UF	25V
C8313	1-115-416-11	CERAMIC CHIP	0.001UF	5.00% 25V
C8314	1-162-927-11	CERAMIC CHIP	100PF	5.00% 50V
C8402	1-130-959-91	FILM	0.047UF	5.00% 400V
C8403	1-162-962-11	CERAMIC CHIP	470PF	10.00% 50V
C8404	1-136-177-00	FILM	1UF	5.00% 50V
C8501	1-162-964-11	CERAMIC CHIP	0.001UF	10.00% 50V
C8502	1-162-970-11	CERAMIC CHIP	0.01UF	10.00% 25V
C8503	1-162-970-11	CERAMIC CHIP	0.01UF	10.00% 25V
C8504	1-162-964-11	CERAMIC CHIP	0.001UF	10.00% 50V
C8506	1-126-947-11	ELECT	47UF	20.00% 35V
C8507	1-165-176-11	CERAMIC CHIP	0.047UF	10.00% 16V
C8607	1-126-964-11	ELECT	10UF	20.00% 50V
C8802	1-164-315-11	CERAMIC CHIP	470PF	5.00% 50V
C8803	1-164-315-11	CERAMIC CHIP	470PF	5.00% 50V
C8804	1-115-416-11	CERAMIC CHIP	0.001UF	5.00% 25V
C8809	1-162-970-11	CERAMIC CHIP	0.01UF	10.00% 25V
C8810	1-126-947-11	ELECT	47UF	20.00% 35V
C8811	1-162-970-11	CERAMIC CHIP	0.01UF	10.00% 25V
C8812	1-126-960-11	ELECT	1UF	20.00% 50V
C8815	1-162-970-11	CERAMIC CHIP	0.01UF	10.00% 25V
C8817	1-162-970-11	CERAMIC CHIP	0.01UF	10.00% 25V
C8820	1-164-227-11	CERAMIC CHIP	0.022UF	10.00% 25V
C8821	1-162-970-11	CERAMIC CHIP	0.01UF	10.00% 25V
C8822	1-136-479-11	FILM	0.001UF	5.00% 100V
C8823	1-162-964-11	CERAMIC CHIP	0.001UF	5.00% 50V
C8824	1-162-964-11	CERAMIC CHIP	0.001UF	10.00% 50V
C8825	1-126-960-11	ELECT	1UF	20.00% 50V

< CONNECTOR >

CN8500	1-764-333-11	PIN, CONNECTOR(PCB)(V TYPE)10P
CN8601	*1-564-506-11	PLUG, CONNECTOR 3P
CN8611	*1-785-270-12	PIN, DY CONNECTOR (PC BOARD)
CN8612	*1-564-511-11	PLUG, CONNECTOR 8P
CN8614	*1-564-508-11	PLUG, CONNECTOR 5P
CN8615	*1-564-509-11	PLUG, CONNECTOR 6P
CN8616	*1-564-510-11	PLUG, CONNECTOR 7P

< DIODE >

D8100	8-719-991-33	DIODE 1SS133T-77
D8101	8-719-110-41	DIODE RD15ESB2
D8102	8-719-110-41	DIODE RD15ESB2
D8201	8-719-302-43	DIODE EL1Z
D8202	8-719-302-43	DIODE EL1Z
D8203	8-719-510-73	DIODE S3L20UF4
D8204	8-719-510-73	DIODE S3L20UF4
D8205	8-719-988-61	DIODE 1SS355TE-17
D8206	8-719-988-61	DIODE 1SS355TE-17
D8309	8-719-988-61	DIODE 1SS355TE-17
D8311	8-719-988-61	DIODE 1SS355TE-17
D8312	8-719-988-61	DIODE 1SS355TE-17
D8313	8-719-988-61	DIODE 1SS355TE-17
D8401	8-719-110-41	DIODE RD15ESB2
D8402	8-719-991-33	DIODE 1SS133T-77
D8603	8-719-991-33	DIODE 1SS133T-77
D8604	8-719-991-33	DIODE 1SS133T-77
D8802	8-719-988-61	DIODE 1SS355TE-17
D8804	8-719-988-61	DIODE 1SS355TE-17
D8805	8-719-988-61	DIODE 1SS355TE-17
D8807	8-719-988-61	DIODE 1SS355TE-17

Note : The components identified by shading and marked ⚠ are critical for safety. Replace only with the part numbers specified in the parts list.

D1

REF.NO.	PART.NO	DESCRIPTION	REMARK
		< IC >	
IC8501	8-759-998-98	IC LM358D	
IC8801	6-701-847-01	IC UPC1898CT-A	
		< COIL >	
L8101	1-419-482-11	INDUCTOR 1.5MH	
L8201	1-535-303-00	LEAD, JUMPER (5.0MM)	
L8202	1-535-303-00	LEAD, JUMPER (5.0MM)	
L8203	1-535-303-00	LEAD, JUMPER (5.0MM)	
L8401	1-406-987-11	INDUCTOR 4.7MH	
		< PROTECTOR MODULE >	
PS8401 ⚠	1-532-841-21	LINK, IC 1.6A PRF1600	
		< TRANSISTOR >	
Q8010	8-729-901-81	TRANSISTOR 2SC2412K-T-146-R	
Q8011	8-729-026-49	TRANSISTOR 2SA1037AK-T146-R	
Q8014	8-729-901-81	TRANSISTOR 2SC2412K-T-146-R	
Q8015	8-729-026-49	TRANSISTOR 2SA1037AK-T146-R	
Q8100	8-729-048-47	TRANSISTOR 2SC2688(5)-LK	
Q8101	8-729-048-47	TRANSISTOR 2SC2688(5)-LK	
Q8102	6-550-125-01	TRANSISTOR 2SC5698-CA	
Q8103	8-729-056-17	TRANSISTOR 2SC5696-SONY-CA	
Q8105	8-729-025-19	TRANSISTOR IRFI740G	
Q8106	8-729-025-19	TRANSISTOR IRFI740G	
Q8201	8-729-019-57	TRANSISTOR 2SA1208S-TP	
Q8308	8-729-026-49	TRANSISTOR 2SA1037AK-T146-R	
Q8401	8-729-025-19	TRANSISTOR IRFI740G	
Q8405	8-729-901-81	TRANSISTOR 2SC2412K-T-146-R	
Q8406	8-729-026-49	TRANSISTOR 2SA1037AK-T146-R	
Q8501	8-729-026-49	TRANSISTOR 2SA1037AK-T146-R	
Q8502	8-729-901-81	TRANSISTOR 2SC2412K-T-146-R	
Q8503	8-729-901-81	TRANSISTOR 2SC2412K-T-146-R	
Q8504	8-729-026-49	TRANSISTOR 2SA1037AK-T146-R	
Q8507	8-729-901-81	TRANSISTOR 2SC2412K-T-146-R	
Q8508	8-729-026-49	TRANSISTOR 2SA1037AK-T146-R	
Q8509	8-729-901-81	TRANSISTOR 2SC2412K-T-146-R	
Q8510	8-729-026-49	TRANSISTOR 2SA1037AK-T146-R	
Q8601	8-729-901-81	TRANSISTOR 2SC2412K-T-146-R	
Q8701	8-729-901-81	TRANSISTOR 2SC2412K-T-146-R	
Q8801	8-729-026-49	TRANSISTOR 2SA1037AK-T146-R	
Q8802	8-729-901-81	TRANSISTOR 2SC2412K-T-146-R	
Q8806	8-729-901-81	TRANSISTOR 2SC2412K-T-146-R	
Q8807	8-729-026-49	TRANSISTOR 2SA1037AK-T146-R	
Q8808	1-801-806-11	TR DTC144EKA	
Q8809	8-729-901-81	TRANSISTOR 2SC2412K-T-146-R	
Q8810	8-729-901-81	TRANSISTOR 2SC2412K-T-146-R	

REF.NO.	PART.NO	DESCRIPTION			REMARK
		< RESISTOR >			
R8028	1-249-411-11	CARBON	330	5%	1/4W
R8033	1-249-411-11	CARBON	330	5%	1/4W
R8100	1-216-460-21	METAL OXIDE	3.9K	5%	2W
R8101	1-215-895-11	METAL OXIDE	3.3K	5%	2W
R8102	1-249-419-11	CARBON	1.5K	5%	1/4W
R8103	1-260-340-11	CARBON	10K	5%	1/2W
R8104	1-215-920-11	METAL OXIDE	3.3K	5%	3W
R8105	1-215-920-11	METAL OXIDE	3.3K	5%	3W
R8107	1-249-419-11	CARBON	1.5K	5%	1/4W
R8108	1-260-340-11	CARBON	10K	5%	1/2W
R8109	1-216-361-21	METAL OXIDE	0.22	5%	2W
R8110	1-215-880-00	METAL OXIDE	10	5%	2W
R8111	1-216-361-21	METAL OXIDE	0.22	5%	2W
R8112	1-215-880-00	METAL OXIDE	10	5%	2W
R8113	1-216-853-11	METAL CHIP	470K	5%	1/10W
R8114	1-216-845-11	METAL CHIP	100K	5%	1/10W
R8115	1-215-493-00	METAL	1M	1%	1/4W
R8116	1-215-485-00	METAL	470K	1%	1/4W
R8117	1-215-493-00	METAL	1M	1%	1/4W
R8118	1-249-401-11	CARBON	47	5%	1/4W
R8119	1-247-807-31	CARBON	100	5%	1/4W
R8120	1-249-425-11	CARBON	4.7K	5%	1/4W
R8121	1-249-425-11	CARBON	4.7K	5%	1/4W
R8201	1-260-123-11	CARBON	100K	5%	1/2W
R8202	1-212-934-00	FUSIBLE	1	5%	1/2W
R8206	1-260-288-11	CARBON	0.47	5%	1/2W
R8207	1-260-288-11	CARBON	0.47	5%	1/2W
R8213	1-216-371-00	METAL OXIDE	1.5	5%	2W
R8214	1-216-364-21	METAL OXIDE	0.39	5%	2W
R8215	1-218-847-11	METAL CHIP	1K	0.5%	1/10W
R8216	1-215-459-00	METAL	39K	1%	1/4W
R8217	1-215-459-00	METAL	39K	1%	1/4W
R8218	1-215-469-00	METAL	100K	1%	1/4W
R8219	1-215-469-00	METAL	100K	1%	1/4W
R8220	1-216-837-11	METAL CHIP	22K	5%	1/10W
R8221	1-216-833-11	METAL CHIP	10K	5%	1/10W
R8222	1-215-469-00	METAL	100K	1%	1/4W
R8223	1-215-469-00	METAL	100K	1%	1/4W
R8308	1-216-841-11	METAL CHIP	47K	5%	1/10W
R8309	1-216-841-11	METAL CHIP	47K	5%	1/10W
R8317	1-215-473-00	METAL	150K	1%	1/4W
R8318	1-215-461-00	METAL	47K	1%	1/4W
R8319	1-218-871-11	METAL CHIP	10K	0.5%	1/10W
R8320	1-216-833-11	METAL CHIP	10K	5%	1/10W
R8321	1-216-825-11	METAL CHIP	2.2K	5%	1/10W
R8327	1-218-883-11	METAL CHIP	33K	0.5%	1/10W
R8331	1-218-871-11	METAL CHIP	10K	0.5%	1/10W
R8332	1-216-833-11	METAL CHIP	10K	5%	1/10W

REF.NO.	PART.NO	DESCRIPTION			REMARK
R8333	1-216-845-11	METAL CHIP	100K	5%	1/10W
R8334	1-216-825-11	METAL CHIP	2.2K	5%	1/10W
R8335	1-218-865-11	METAL CHIP	5.6K	0.5%	1/10W
R8336	1-215-469-00	METAL	100K	1%	1/4W
R8363	1-218-863-11	METAL CHIP	4.7K	0.5%	1/10W
R8364	1-218-861-11	METAL CHIP	3.9K	0.5%	1/10W
R8404	1-216-805-11	METAL CHIP	47	5%	1/10W
R8501	1-218-895-11	METAL CHIP	100K	0.5%	1/10W
R8503	1-216-829-11	METAL CHIP	4.7K	5%	1/10W
R8504	1-216-829-11	METAL CHIP	4.7K	5%	1/10W
R8505	1-216-833-11	METAL CHIP	10K	5%	1/10W
R8506	1-216-845-11	METAL CHIP	100K	5%	1/10W
R8508	1-216-864-11	SHORT CHIP	0		
R8509	1-216-864-11	SHORT CHIP	0		
R8510	1-216-821-11	METAL CHIP	1K	5%	1/10W
R8512	1-216-845-11	METAL CHIP	100K	5%	1/10W
R8513	1-216-821-11	METAL CHIP	1K	5%	1/10W
R8514	1-216-833-11	METAL CHIP	10K	5%	1/10W
R8515	1-216-829-11	METAL CHIP	4.7K	5%	1/10W
R8516	1-216-829-11	METAL CHIP	4.7K	5%	1/10W
R8517	1-216-821-11	METAL CHIP	1K	5%	1/10W
R8518	1-218-895-11	METAL CHIP	100K	0.5%	1/10W
R8606	1-216-837-11	METAL CHIP	22K	5%	1/10W
R8607	1-216-837-11	METAL CHIP	22K	5%	1/10W
R8608	1-216-845-11	METAL CHIP	100K	5%	1/10W
R8609	1-216-837-11	METAL CHIP	22K	5%	1/10W
R8701	1-215-469-00	METAL	100K	1%	1/4W
R8702	1-216-833-11	METAL CHIP	10K	5%	1/10W
R8703	1-216-825-11	METAL CHIP	2.2K	5%	1/10W
R8802	1-216-864-11	SHORT CHIP	0		
R8803	1-218-887-11	METAL CHIP	47K	0.5%	1/10W
R8804	1-216-829-11	METAL CHIP	4.7K	5%	1/10W
R8805	1-216-833-11	METAL CHIP	10K	5%	1/10W
R8810	1-216-845-11	METAL CHIP	100K	5%	1/10W
R8811	1-216-845-11	METAL CHIP	100K	5%	1/10W
R8812	1-216-864-11	SHORT CHIP	0		
R8813	1-216-864-11	SHORT CHIP	0		
R8814	1-218-879-11	METAL CHIP	22K	0.5%	1/10W
R8815	1-218-871-11	METAL CHIP	10K	0.5%	1/10W
R8822	1-216-845-11	METAL CHIP	100K	5%	1/10W
R8824	1-216-829-11	METAL CHIP	4.7K	5%	1/10W
R8829	1-216-809-11	METAL CHIP	100	5%	1/10W
R8831	1-216-829-11	METAL CHIP	4.7K	5%	1/10W
R8832	1-218-871-11	METAL CHIP	10K	0.5%	1/10W
R8833	1-218-879-11	METAL CHIP	22K	0.5%	1/10W
R8834	1-215-469-00	METAL	100K	1%	1/4W
R8835	1-216-833-11	METAL CHIP	10K	5%	1/10W
R8836	1-216-833-11	METAL CHIP	10K	5%	1/10W
R8837	1-216-837-11	METAL CHIP	22K	5%	1/10W
R8842	1-218-869-11	METAL CHIP	8.2K	0.5%	1/10W

REF.NO.	PART.NO	DESCRIPTION			REMARK
R8843	1-216-815-11	METAL CHIP	330	5%	1/10W
R8844	1-215-469-00	METAL	100K	1%	1/4W
R8845	1-215-469-00	METAL	100K	1%	1/4W
R8848	1-216-845-11	METAL CHIP	100K	5%	1/10W
R8849	1-216-845-11	METAL CHIP	100K	5%	1/10W
R8851	1-216-833-11	METAL CHIP	10K	5%	1/10W
R8853	1-216-857-11	METAL CHIP	1M	5%	1/10W
R8854	1-216-837-11	METAL CHIP	22K	5%	1/10W
R8855	1-216-864-11	SHORT CHIP	0		
R8856	1-216-837-11	METAL CHIP	22K	5%	1/10W
R8857	1-216-841-11	METAL CHIP	47K	5%	1/10W
R8858	1-216-845-11	METAL CHIP	100K	5%	1/10W
R8859	1-218-833-11	METAL CHIP	270	0.5%	1/10W
R8860	1-218-881-11	METAL CHIP	27K	0.5%	1/10W
R8861	1-216-825-11	METAL CHIP	2.2K	5%	1/10W
R8862	1-216-833-11	METAL CHIP	10K	5%	1/10W
R8863	1-216-864-11	SHORT CHIP	0		

< TRANSFORMER >

T8100	1-433-489-31	TRANSFORMER, FERRITE (HDT)	
T8101	1-433-489-31	TRANSFORMER, FERRITE (HDT)	
T8202	1-437-614-11	TRANSFORMER, HORIZONTAL OUTPUT	
T8805	1-429-741-11	TRANSFORMER, DRIVE	

* A-1300-686-A B5 Board, Complete

	4-087-203-01	PLASTIC RIVET	
	4-382-854-01	SCREW (M3X8), P, SW (+)	

< CAPACITOR >

C3101	1-124-779-00	ELECT CHIP	10UF	20.00% 16V
C3102	1-162-970-11	CERAMIC CHIP	0.01UF	10.00% 25V
C3104	1-126-395-11	ELECT CHIP	22UF	20.00% 16V
C3105	1-162-970-11	CERAMIC CHIP	0.01UF	10.00% 25V
C3106	1-162-970-11	CERAMIC CHIP	0.01UF	10.00% 25V
C3107	1-162-970-11	CERAMIC CHIP	0.01UF	10.00% 25V
C3108	1-162-970-11	CERAMIC CHIP	0.01UF	10.00% 25V
C3109	1-162-970-11	CERAMIC CHIP	0.01UF	10.00% 25V
C3110	1-162-970-11	CERAMIC CHIP	0.01UF	10.00% 25V
C3111	1-162-970-11	CERAMIC CHIP	0.01UF	10.00% 25V
C3112	1-124-779-00	ELECT CHIP	10UF	20.00% 16V
C3113	1-162-970-11	CERAMIC CHIP	0.01UF	10.00% 25V
C3114	1-162-970-11	CERAMIC CHIP	0.01UF	10.00% 25V
C3115	1-162-970-11	CERAMIC CHIP	0.01UF	10.00% 25V
C3116	1-162-970-11	CERAMIC CHIP	0.01UF	10.00% 25V
C3117	1-162-970-11	CERAMIC CHIP	0.01UF	10.00% 25V
C3118	1-162-970-11	CERAMIC CHIP	0.01UF	10.00% 25V
C3119	1-162-970-11	CERAMIC CHIP	0.01UF	10.00% 25V
C3120	1-162-970-11	CERAMIC CHIP	0.01UF	10.00% 25V
C3121	1-162-970-11	CERAMIC CHIP	0.01UF	10.00% 25V

REF.NO.	PART.NO	DESCRIPTION	REMARK
C3122	1-162-970-11	CERAMIC CHIP 0.01UF	10.00% 25V
C3124	1-124-779-00	ELECT CHIP 10UF	20.00% 16V
C3125	1-162-970-11	CERAMIC CHIP 0.01UF	10.00% 25V
C3126	1-162-970-11	CERAMIC CHIP 0.01UF	10.00% 25V
C3127	1-162-970-11	CERAMIC CHIP 0.01UF	10.00% 25V
C3128	1-162-970-11	CERAMIC CHIP 0.01UF	10.00% 25V
C3129	1-162-970-11	CERAMIC CHIP 0.01UF	10.00% 25V
C3130	1-162-970-11	CERAMIC CHIP 0.01UF	10.00% 25V
C3131	1-162-970-11	CERAMIC CHIP 0.01UF	10.00% 25V
C3132	1-162-970-11	CERAMIC CHIP 0.01UF	10.00% 25V
C3133	1-162-970-11	CERAMIC CHIP 0.01UF	10.00% 25V
C3134	1-162-970-11	CERAMIC CHIP 0.01UF	10.00% 25V
C3135	1-162-970-11	CERAMIC CHIP 0.01UF	10.00% 25V
C3136	1-162-970-11	CERAMIC CHIP 0.01UF	10.00% 25V
C3137	1-162-970-11	CERAMIC CHIP 0.01UF	10.00% 25V
C3139	1-124-779-00	ELECT CHIP 10UF	20.00% 16V
C3140	1-162-970-11	CERAMIC CHIP 0.01UF	10.00% 25V
C3141	1-162-970-11	CERAMIC CHIP 0.01UF	10.00% 25V
C3142	1-162-970-11	CERAMIC CHIP 0.01UF	10.00% 25V
C3143	1-162-970-11	CERAMIC CHIP 0.01UF	10.00% 25V
C3144	1-162-970-11	CERAMIC CHIP 0.01UF	10.00% 25V
C3148	1-124-779-00	ELECT CHIP 10UF	20.00% 16V
C3149	1-124-779-00	ELECT CHIP 10UF	20.00% 16V
C3150	1-162-970-11	CERAMIC CHIP 0.01UF	10.00% 25V
C3151	1-162-970-11	CERAMIC CHIP 0.01UF	10.00% 25V
C3152	1-124-779-00	ELECT CHIP 10UF	20.00% 16V
C3153	1-124-779-00	ELECT CHIP 10UF	20.00% 16V
C3154	1-124-779-00	ELECT CHIP 10UF	20.00% 16V
C3155	1-124-779-00	ELECT CHIP 10UF	20.00% 16V
C3156	1-162-970-11	CERAMIC CHIP 0.01UF	10.00% 25V
C3157	1-107-826-11	CERAMIC CHIP 0.1UF	10.00% 16V
C3159	1-107-826-11	CERAMIC CHIP 0.1UF	10.00% 16V
C3160	1-107-826-11	CERAMIC CHIP 0.1UF	10.00% 16V
C3161	1-107-826-11	CERAMIC CHIP 0.1UF	10.00% 16V
C3162	1-107-826-11	CERAMIC CHIP 0.1UF	10.00% 16V
C3164	1-124-779-00	ELECT CHIP 10UF	20.00% 16V
C3165	1-107-826-11	CERAMIC CHIP 0.1UF	10.00% 16V
C3166	1-107-826-11	CERAMIC CHIP 0.1UF	10.00% 16V
C3167	1-107-826-11	CERAMIC CHIP 0.1UF	10.00% 16V
C3168	1-107-826-11	CERAMIC CHIP 0.1UF	10.00% 16V
C3170	1-124-779-00	ELECT CHIP 10UF	20.00% 16V
C3176	1-124-779-00	ELECT CHIP 10UF	20.00% 16V
C3230	1-162-970-11	CERAMIC CHIP 0.01UF	10.00% 25V
C3232	1-162-970-11	CERAMIC CHIP 0.01UF	10.00% 25V
C3233	1-162-970-11	CERAMIC CHIP 0.01UF	10.00% 25V
C3234	1-162-970-11	CERAMIC CHIP 0.01UF	10.00% 25V
C3237	1-162-970-11	CERAMIC CHIP 0.01UF	10.00% 25V
C4201	1-162-970-11	CERAMIC CHIP 0.01UF	10.00% 25V
C4202	1-162-970-11	CERAMIC CHIP 0.01UF	10.00% 25V
C4203	1-126-206-11	ELECT CHIP 100UF	20.00% 6.3V
C4204	1-162-970-11	CERAMIC CHIP 0.01UF	10.00% 25V
C4205	1-162-970-11	CERAMIC CHIP 0.01UF	10.00% 25V
C4206	1-162-970-11	CERAMIC CHIP 0.01UF	10.00% 25V
C4207	1-162-970-11	CERAMIC CHIP 0.01UF	10.00% 25V
C4208	1-124-779-00	ELECT CHIP 10UF	20.00% 16V
C4209	1-124-779-00	ELECT CHIP 10UF	20.00% 16V
C4210	1-162-970-11	CERAMIC CHIP 0.01UF	10.00% 25V
C4211	1-162-970-11	CERAMIC CHIP 0.01UF	10.00% 25V
C4212	1-162-970-11	CERAMIC CHIP 0.01UF	10.00% 25V
C4213	1-162-970-11	CERAMIC CHIP 0.01UF	10.00% 25V
C4214	1-162-970-11	CERAMIC CHIP 0.01UF	10.00% 25V
C4215	1-162-970-11	CERAMIC CHIP 0.01UF	10.00% 25V
C4216	1-162-970-11	CERAMIC CHIP 0.01UF	10.00% 25V
C4217	1-162-970-11	CERAMIC CHIP 0.01UF	10.00% 25V
C4218	1-162-970-11	CERAMIC CHIP 0.01UF	10.00% 25V
C4219	1-162-970-11	CERAMIC CHIP 0.01UF	10.00% 25V
C4220	1-162-970-11	CERAMIC CHIP 0.01UF	10.00% 25V
C4221	1-162-970-11	CERAMIC CHIP 0.01UF	10.00% 25V
C4222	1-162-970-11	CERAMIC CHIP 0.01UF	10.00% 25V
C4223	1-162-970-11	CERAMIC CHIP 0.01UF	10.00% 25V
C4224	1-162-970-11	CERAMIC CHIP 0.01UF	10.00% 25V
C4225	1-162-970-11	CERAMIC CHIP 0.01UF	10.00% 25V
C4226	1-162-970-11	CERAMIC CHIP 0.01UF	10.00% 25V
C4227	1-162-970-11	CERAMIC CHIP 0.01UF	10.00% 25V
C4228	1-162-970-11	CERAMIC CHIP 0.01UF	10.00% 25V
C4229	1-162-970-11	CERAMIC CHIP 0.01UF	10.00% 25V
C4230	1-162-970-11	CERAMIC CHIP 0.01UF	10.00% 25V
C4231	1-162-970-11	CERAMIC CHIP 0.01UF	10.00% 25V
C4232	1-162-970-11	CERAMIC CHIP 0.01UF	10.00% 25V
C4233	1-162-970-11	CERAMIC CHIP 0.01UF	10.00% 25V
C4234	1-107-826-11	CERAMIC CHIP 0.1UF	10.00% 16V
C4235	1-107-826-11	CERAMIC CHIP 0.1UF	10.00% 16V
C4236	1-162-970-11	CERAMIC CHIP 0.01UF	10.00% 25V
C4237	1-107-826-11	CERAMIC CHIP 0.1UF	10.00% 16V
C4238	1-126-204-11	ELECT CHIP 47UF	20.00% 16V
C4246	1-162-970-11	CERAMIC CHIP 0.01UF	10.00% 25V
C4340	1-162-970-11	CERAMIC CHIP 0.01UF	10.00% 25V
C4341	1-162-970-11	CERAMIC CHIP 0.01UF	10.00% 25V
C4342	1-162-970-11	CERAMIC CHIP 0.01UF	10.00% 25V
C4343	1-162-970-11	CERAMIC CHIP 0.01UF	10.00% 25V
C4344	1-162-970-11	CERAMIC CHIP 0.01UF	10.00% 25V
C4345	1-162-970-11	CERAMIC CHIP 0.01UF	10.00% 25V
C4346	1-162-970-11	CERAMIC CHIP 0.01UF	10.00% 25V
C4347	1-162-970-11	CERAMIC CHIP 0.01UF	10.00% 25V
C4348	1-162-970-11	CERAMIC CHIP 0.01UF	10.00% 25V
C4349	1-162-970-11	CERAMIC CHIP 0.01UF	10.00% 25V
C4350	1-162-970-11	CERAMIC CHIP 0.01UF	10.00% 25V
C4351	1-162-970-11	CERAMIC CHIP 0.01UF	10.00% 25V
C4352	1-162-970-11	CERAMIC CHIP 0.01UF	10.00% 25V
C4370	1-124-779-00	ELECT CHIP 10UF	20.00% 16V

REF.NO.	PART.NO	DESCRIPTION	REMARK
C4371	1-124-779-00	ELECT CHIP 10UF	20.00% 16V
C4372	1-126-204-11	ELECT CHIP 47UF	20.00% 16V
C4426	1-126-204-11	ELECT CHIP 47UF	20.00% 16V
C4429	1-162-970-11	CERAMIC CHIP 0.01UF	10.00% 25V
C4430	1-162-970-11	CERAMIC CHIP 0.01UF	10.00% 25V
C4431	1-162-970-11	CERAMIC CHIP 0.01UF	10.00% 25V
C4432	1-162-970-11	CERAMIC CHIP 0.01UF	10.00% 25V
C4433	1-126-206-11	ELECT CHIP 100UF	20.00% 6.3V
C4434	1-107-826-11	CERAMIC CHIP 0.1UF	10.00% 16V
C4438	1-162-970-11	CERAMIC CHIP 0.01UF	10.00% 25V
C4442	1-126-204-11	ELECT CHIP 47UF	20.00% 16V
C4443	1-162-970-11	CERAMIC CHIP 0.01UF	10.00% 25V
C4444	1-162-970-11	CERAMIC CHIP 0.01UF	10.00% 25V
C4445	1-162-970-11	CERAMIC CHIP 0.01UF	10.00% 25V
C4446	1-126-204-11	ELECT CHIP 47UF	20.00% 16V
C4447	1-126-204-11	ELECT CHIP 47UF	20.00% 16V
C4448	1-126-204-11	ELECT CHIP 47UF	20.00% 16V
C4450	1-162-970-11	CERAMIC CHIP 0.01UF	10.00% 25V
C4451	1-162-970-11	CERAMIC CHIP 0.01UF	10.00% 25V
C4452	1-162-970-11	CERAMIC CHIP 0.01UF	10.00% 25V
C4453	1-162-970-11	CERAMIC CHIP 0.01UF	10.00% 25V
C4454	1-162-970-11	CERAMIC CHIP 0.01UF	10.00% 25V
C4463	1-126-204-11	ELECT CHIP 47UF	20.00% 16V
C4464	1-162-970-11	CERAMIC CHIP 0.01UF	10.00% 25V
C4465	1-162-970-11	CERAMIC CHIP 0.01UF	10.00% 25V
C4466	1-162-970-11	CERAMIC CHIP 0.01UF	10.00% 25V
C4467	1-162-970-11	CERAMIC CHIP 0.01UF	10.00% 25V
C4468	1-162-970-11	CERAMIC CHIP 0.01UF	10.00% 25V
C4469	1-162-970-11	CERAMIC CHIP 0.01UF	10.00% 25V
C4470	1-162-970-11	CERAMIC CHIP 0.01UF	10.00% 25V
C4471	1-162-970-11	CERAMIC CHIP 0.01UF	10.00% 25V
C4472	1-162-970-11	CERAMIC CHIP 0.01UF	10.00% 25V
C4473	1-162-970-11	CERAMIC CHIP 0.01UF	10.00% 25V
C4474	1-162-970-11	CERAMIC CHIP 0.01UF	10.00% 25V
C4475	1-162-970-11	CERAMIC CHIP 0.01UF	10.00% 25V
C4476	1-162-970-11	CERAMIC CHIP 0.01UF	10.00% 25V
C4477	1-162-970-11	CERAMIC CHIP 0.01UF	10.00% 25V
C4478	1-162-970-11	CERAMIC CHIP 0.01UF	10.00% 25V
C4479	1-162-970-11	CERAMIC CHIP 0.01UF	10.00% 25V
C4480	1-162-970-11	CERAMIC CHIP 0.01UF	10.00% 25V
C4481	1-162-970-11	CERAMIC CHIP 0.01UF	10.00% 25V
C4482	1-162-970-11	CERAMIC CHIP 0.01UF	10.00% 25V
C4483	1-126-204-11	ELECT CHIP 47UF	20.00% 16V
C4501	1-162-970-11	CERAMIC CHIP 0.01UF	10.00% 25V
C4502	1-164-156-11	CERAMIC CHIP 0.1UF	25V
C4503	1-162-905-11	CERAMIC CHIP 1PF	0.25PF 50V
C4504	1-162-905-11	CERAMIC CHIP 1PF	0.25PF 50V
C4505	1-164-156-11	CERAMIC CHIP 0.1UF	25V
C4506	1-162-905-11	CERAMIC CHIP 1PF	0.25PF 50V
C4507	1-162-905-11	CERAMIC CHIP 1PF	0.25PF 50V
C4508	1-162-905-11	CERAMIC CHIP 1PF	0.25PF 50V
C4509	1-162-905-11	CERAMIC CHIP 1PF	0.25PF 50V
C4510	1-162-905-11	CERAMIC CHIP 1PF	0.25PF 50V
C4511	1-162-905-11	CERAMIC CHIP 1PF	0.25PF 50V
C4512	1-162-905-11	CERAMIC CHIP 1PF	0.25PF 50V
C4513	1-162-905-11	CERAMIC CHIP 1PF	0.25PF 50V
C4514	1-162-905-11	CERAMIC CHIP 1PF	0.25PF 50V
C4515	1-164-156-11	CERAMIC CHIP 0.1UF	25V
C4516	1-164-156-11	CERAMIC CHIP 0.1UF	25V
C4603	1-162-970-11	CERAMIC CHIP 0.01UF	10.00% 25V
C4604	1-162-970-11	CERAMIC CHIP 0.01UF	10.00% 25V
C4605	1-124-779-00	ELECT CHIP 10UF	20.00% 16V
C4606	1-162-970-11	CERAMIC CHIP 0.01UF	10.00% 25V
C4607	1-124-779-00	ELECT CHIP 10UF	20.00% 16V
C4608	1-162-970-11	CERAMIC CHIP 0.01UF	10.00% 25V
C4609	1-124-779-00	ELECT CHIP 10UF	20.00% 16V
C4610	1-124-779-00	ELECT CHIP 10UF	20.00% 16V
C4611	1-162-970-11	CERAMIC CHIP 0.01UF	10.00% 25V
C4612	1-162-970-11	CERAMIC CHIP 0.01UF	10.00% 25V
C4613	1-162-970-11	CERAMIC CHIP 0.01UF	10.00% 25V
C4614	1-162-970-11	CERAMIC CHIP 0.01UF	10.00% 25V
C4615	1-162-970-11	CERAMIC CHIP 0.01UF	10.00% 25V
C4616	1-162-970-11	CERAMIC CHIP 0.01UF	10.00% 25V
C4617	1-162-970-11	CERAMIC CHIP 0.01UF	10.00% 25V
C4618	1-162-970-11	CERAMIC CHIP 0.01UF	10.00% 25V
C4620	1-162-968-11	CERAMIC CHIP 0.0047UF	10.00% 50V
C4621	1-162-970-11	CERAMIC CHIP 0.01UF	10.00% 25V
C4622	1-162-916-11	CERAMIC CHIP 12PF	5.00% 50V
C4623	1-162-970-11	CERAMIC CHIP 0.01UF	10.00% 25V
C4624	1-162-916-11	CERAMIC CHIP 12PF	5.00% 50V
C4625	1-162-970-11	CERAMIC CHIP 0.01UF	10.00% 25V
C4626	1-162-970-11	CERAMIC CHIP 0.01UF	10.00% 25V
C4627	1-162-970-11	CERAMIC CHIP 0.01UF	10.00% 25V
C4628	1-162-970-11	CERAMIC CHIP 0.01UF	10.00% 25V
C4629	1-162-970-11	CERAMIC CHIP 0.01UF	10.00% 25V
C4630	1-162-970-11	CERAMIC CHIP 0.01UF	10.00% 25V
C4631	1-162-970-11	CERAMIC CHIP 0.01UF	10.00% 25V
C4632	1-162-970-11	CERAMIC CHIP 0.01UF	10.00% 25V
C4633	1-162-970-11	CERAMIC CHIP 0.01UF	10.00% 25V
C4634	1-107-826-11	CERAMIC CHIP 0.1UF	10.00% 16V
C4635	1-162-970-11	CERAMIC CHIP 0.01UF	10.00% 25V
C4636	1-126-206-11	ELECT CHIP 100UF	20.00% 6.3V
C4637	1-162-970-11	CERAMIC CHIP 0.01UF	10.00% 25V
C4644	1-124-779-00	ELECT CHIP 10UF	20.00% 16V
C4648	1-107-826-11	CERAMIC CHIP 0.1UF	10.00% 16V
C4649	1-107-826-11	CERAMIC CHIP 0.1UF	10.00% 16V
C4650	1-107-826-11	CERAMIC CHIP 0.1UF	10.00% 16V
C4652	1-162-970-11	CERAMIC CHIP 0.01UF	10.00% 25V
C4653	1-162-970-11	CERAMIC CHIP 0.01UF	10.00% 25V
C4700	1-162-970-11	CERAMIC CHIP 0.01UF	10.00% 25V

REF.NO.	PART.NO	DESCRIPTION	REMARK
C4701	1-107-826-11	CERAMIC CHIP 0.1UF	10.00% 16V
C4702	1-107-826-11	CERAMIC CHIP 0.1UF	10.00% 16V
C4909	1-162-927-11	CERAMIC CHIP 100PF	5.00% 50V
C4910	1-162-927-11	CERAMIC CHIP 100PF	5.00% 50V
		< CONNECTOR >	
CN4472	1-816-448-11	CONNECTOR, BOARD TO BOARD 50P	
CN4473	*1-816-550-11	CONNECTOR, BOARD TO BOARD 20P	
CN4474	*1-816-070-21	CONNECTOR, BOARD TO BOARD 60P	
CN4475	1-794-959-21	PIN, CONNECTOR (PWB, PRINT)20P	
CN4501	1-794-011-21	PIN, CONNECTOR (WITH PWB) 6P	
		< DIODE >	
D4400	8-719-083-58	DIODE UDZSTE-173.9B	
D4602	8-719-158-02	DIODE RD3.9SB2	
D4603	8-719-914-42	DIODE DA204K	
		< FERRITE BEAD >	
FB4302	1-414-760-21	FERRITE 0UH	
FB4303	1-414-760-21	FERRITE 0UH	
FB4400	1-414-760-21	FERRITE 0UH	
FB4401	1-414-760-21	FERRITE 0UH	
FB4402	1-414-760-21	FERRITE 0UH	
FB4403	1-414-760-21	FERRITE 0UH	
FB4404	1-414-760-21	FERRITE 0UH	
FB4405	1-414-760-21	FERRITE 0UH	
FB4501	1-543-949-22	FERRITE 0UH	
FB4502	1-543-949-22	FERRITE 0UH	
FB4600	1-414-760-21	FERRITE 0UH	
FB4601	1-414-760-21	FERRITE 0UH	
FB4614	1-414-921-11	FERRITE 0UH	
FB4615	1-414-921-11	FERRITE 0UH	
FB4616	1-414-921-11	FERRITE 0UH	
FB4619	1-414-921-11	FERRITE 0UH	
FB4620	1-469-568-21	FERRITE 0UH	
		< FILTER >	
FL3100	1-233-877-11	FILTER, LOW PASS	
FL3101	1-234-177-21	FERRITE 0UH	
FL3102	1-234-177-21	FERRITE 0UH	
FL3103	1-233-877-11	FILTER, LOW PASS	
FL3104	1-234-177-21	FERRITE 0UH	
FL3105	1-233-877-11	FILTER, LOW PASS	
FL3106	1-233-877-11	FILTER, LOW PASS	
FL3107	1-233-877-11	FILTER, LOW PASS	
FL3108	1-233-877-11	FILTER, LOW PASS	
FL3109	1-234-177-21	FERRITE 0UH	
FL3110	1-234-177-21	FERRITE 0UH	
FL4200	1-234-177-21	FERRITE 0UH	
FL4201	1-234-177-21	FERRITE 0UH	

REF.NO.	PART.NO	DESCRIPTION	REMARK
FL4202	1-234-177-21	FERRITE 0UH	
FL4203	1-239-560-11	FILTER, CHIP EMI	
FL4310	1-234-177-21	FERRITE 0UH	
FL4405	1-234-177-21	FERRITE 0UH	
FL4406	1-234-177-21	FERRITE 0UH	
FL4407	1-234-177-21	FERRITE 0UH	
FL4408	1-234-177-21	FERRITE 0UH	
FL4409	1-234-177-21	FERRITE 0UH	
FL4410	1-234-177-21	FERRITE 0UH	
FL4411	1-234-177-21	FERRITE 0UH	
FL4412	1-234-177-21	FERRITE 0UH	
FL4600	1-234-177-21	FERRITE 0UH	
FL4601	1-234-177-21	FERRITE 0UH	
FL4602	1-234-177-21	FERRITE 0UH	
FL4603	1-234-177-21	FERRITE 0UH	
FL4604	1-234-177-21	FERRITE 0UH	
FL4606	1-234-177-21	FERRITE 0UH	
FL4607	1-234-177-21	FERRITE 0UH	
FL4608	1-234-494-21	FILTER, EMI REMOVAL (SMD)	
FL4902	1-234-113-21	FILTER, LOW PASS	
FL4903	1-234-112-21	FILTER, LOW PASS	
FL4904	1-234-112-21	FILTER, LOW PASS	
		< IC >	
IC3100	8-752-413-28	IC CXD2096Q	
IC4201	6-701-120-01	IC W981616BH-7-EL10	
IC4203	8-752-409-78	IC CXD2095AQ	
IC4304	6-700-797-01	IC CXD9666Q	
IC4401	6-702-070-01	IC CXD9665Q	
IC4402	8-759-640-16	IC TC7SET04F(TE85R)	
IC4403	8-759-640-16	IC TC7SET04F(TE85R)	
IC4404	8-759-669-78	IC TLC2933IPWR-12	
IC4404	8-759-669-78	IC TLC2933IPWR-12	
IC4406	8-759-447-77	IC TC7WH74FU(TE12R)	
IC4407	8-759-447-77	IC TC7WH74FU(TE12R)	
IC4501	6-802-162-01	IC XC9536XL-10VQ64C-8U1	
IC4600	8-759-672-57	IC CXD9509AQ	
IC4602	8-759-677-37	IC MT48LC2M32B2TG-7	
IC4603	8-759-639-85	IC SN65LVDS31DR	
IC4604	6-701-762-11	IC DS90LV018ATMX	
IC4605	8-759-698-08	IC SN74CBTLV1G125DCKR	
		< COIL >	
L3102	1-412-026-11	INDUCTOR 1UH	
L4300	1-469-525-91	INDUCTOR 10UH	
L4301	1-469-525-91	INDUCTOR 10UH	
L4400	1-469-525-91	INDUCTOR 10UH	
L4401	1-469-525-91	INDUCTOR 10UH	
L4402	1-412-026-11	INDUCTOR 1UH	

REF.NO.	PART.NO	DESCRIPTION	REMARK
L4403	1-469-522-91	INDUCTOR 1UH	
L4404	1-469-522-91	INDUCTOR 1UH	
L4405	1-469-522-91	INDUCTOR 1UH	
L4406	1-469-525-91	INDUCTOR 10UH	
L4408	1-469-522-91	INDUCTOR 1UH	
L4409	1-469-522-91	INDUCTOR 1UH	
L4410	1-469-522-91	INDUCTOR 1UH	
L4411	1-469-525-91	INDUCTOR 10UH	
L4412	1-412-026-11	INDUCTOR 1UH	
L4601	1-419-370-21	INDUCTOR 0UH	
L4602	1-419-370-21	INDUCTOR 0UH	
L4603	1-419-370-21	INDUCTOR 0UH	
L4604	1-419-370-21	INDUCTOR 0UH	
L4608	1-419-370-21	INDUCTOR 0UH	
		< TRANSISTOR >	
Q3100	8-729-422-33	TRANSISTOR 2SD601A-Q-TX	
Q3102	8-729-422-33	TRANSISTOR 2SD601A-Q-TX	
Q3104	8-729-026-49	TRANSISTOR 2SA1037AK-T146-R	
Q3106	8-729-422-33	TRANSISTOR 2SD601A-Q-TX	
Q3107	8-729-026-49	TRANSISTOR 2SA1037AK-T146-R	
Q3108	8-729-422-33	TRANSISTOR 2SD601A-Q-TX	
Q3109	8-729-026-49	TRANSISTOR 2SA1037AK-T146-R	
Q3110	8-729-422-33	TRANSISTOR 2SD601A-Q-TX	
Q3111	8-729-026-49	TRANSISTOR 2SA1037AK-T146-R	
Q3112	8-729-422-33	TRANSISTOR 2SD601A-Q-TX	
Q3113	8-729-422-33	TRANSISTOR 2SD601A-Q-TX	
Q3114	8-729-422-33	TRANSISTOR 2SD601A-Q-TX	
Q3116	8-729-422-33	TRANSISTOR 2SD601A-Q-TX	
Q3117	8-729-422-33	TRANSISTOR 2SD601A-Q-TX	
Q3118	8-729-026-49	TRANSISTOR 2SA1037AK-T146-R	
Q3119	8-729-026-49	TRANSISTOR 2SA1037AK-T146-R	
Q3120	8-729-422-33	TRANSISTOR 2SD601A-Q-TX	
Q3122	8-729-422-33	TRANSISTOR 2SD601A-Q-TX	
Q3207	8-729-422-33	TRANSISTOR 2SD601A-Q-TX	
Q3208	8-729-422-33	TRANSISTOR 2SD601A-Q-TX	
Q3209	8-729-422-33	TRANSISTOR 2SD601A-Q-TX	
Q4300	8-729-026-49	TRANSISTOR 2SA1037AK-T146-R	
Q4301	8-729-026-49	TRANSISTOR 2SA1037AK-T146-R	
Q4302	8-729-026-49	TRANSISTOR 2SA1037AK-T146-R	
Q4401	8-729-028-28	TRANSISTOR 2SK2036(TE85L)	
Q4402	8-729-028-28	TRANSISTOR 2SK2036(TE85L)	
Q4405	8-729-422-33	TRANSISTOR 2SD601A-Q-TX	
Q4406	8-729-026-49	TRANSISTOR 2SA1037AK-T146-R	
Q4407	8-729-422-33	TRANSISTOR 2SD601A-Q-TX	
Q4408	8-729-422-33	TRANSISTOR 2SD601A-Q-TX	
Q4412	1-801-806-11	TR DTC144EKA	
Q4413	1-801-806-11	TR DTC144EKA	
Q4600	8-729-422-33	TRANSISTOR 2SD601A-Q-TX	
Q4903	8-729-026-49	TRANSISTOR 2SA1037AK-T146-R	
Q4904	8-729-026-49	TRANSISTOR 2SA1037AK-T146-R	
Q4905	8-729-026-49	TRANSISTOR 2SA1037AK-T146-R	
		< RESISTOR >	
R3100	1-216-864-11	SHORT CHIP 0	
R3101	1-216-864-11	SHORT CHIP 0	
R3102	1-216-813-11	METAL CHIP 220 5% 1/10W	
R3103	1-216-813-11	METAL CHIP 220 5% 1/10W	
R3104	1-216-815-11	METAL CHIP 330 5% 1/10W	
R3105	1-218-843-11	METAL CHIP 680 0.5% 1/10W	
R3106	1-218-847-11	METAL CHIP 1K 0.5% 1/10W	
R3107	1-216-864-11	SHORT CHIP 0	
R3108	1-218-843-11	METAL CHIP 680 0.5% 1/10W	
R3109	1-218-847-11	METAL CHIP 1K 0.5% 1/10W	
R3110	1-216-864-11	SHORT CHIP 0	
R3111	1-218-865-11	METAL CHIP 5.6K 0.5% 1/10W	
R3112	1-216-818-11	METAL CHIP 560 5% 1/10W	
R3113	1-216-818-11	METAL CHIP 560 5% 1/10W	
R3114	1-216-864-11	SHORT CHIP 0	
R3115	1-216-864-11	SHORT CHIP 0	
R3119	1-216-815-11	METAL CHIP 330 5% 1/10W	
R3120	1-218-865-11	METAL CHIP 5.6K 0.5% 1/10W	
R3121	1-216-864-11	SHORT CHIP 0	
R3122	1-216-864-11	SHORT CHIP 0	
R3123	1-216-864-11	SHORT CHIP 0	
R3124	1-216-864-11	SHORT CHIP 0	
R3125	1-216-864-11	SHORT CHIP 0	
R3126	1-216-864-11	SHORT CHIP 0	
R3127	1-216-864-11	SHORT CHIP 0	
R3128	1-216-818-11	METAL CHIP 560 5% 1/10W	
R3129	1-216-864-11	SHORT CHIP 0	
R3130	1-216-818-11	METAL CHIP 560 5% 1/10W	
R3131	1-216-809-11	METAL CHIP 100 5% 1/10W	
R3132	1-216-815-11	METAL CHIP 330 5% 1/10W	
R3133	1-218-865-11	METAL CHIP 5.6K 0.5% 1/10W	
R3134	1-216-818-11	METAL CHIP 560 5% 1/10W	
R3135	1-216-818-11	METAL CHIP 560 5% 1/10W	
R3136	1-216-815-11	METAL CHIP 330 5% 1/10W	
R3137	1-218-865-11	METAL CHIP 5.6K 0.5% 1/10W	
R3138	1-216-813-11	METAL CHIP 220 5% 1/10W	
R3139	1-216-864-11	SHORT CHIP 0	
R3140	1-216-813-11	METAL CHIP 220 5% 1/10W	
R3141	1-216-813-11	METAL CHIP 220 5% 1/10W	
R3142	1-216-818-11	METAL CHIP 560 5% 1/10W	
R3143	1-216-821-11	METAL CHIP 1K 5% 1/10W	
R3144	1-218-835-11	METAL CHIP 330 0.5% 1/10W	
R3145	1-216-821-11	METAL CHIP 1K 5% 1/10W	
R3146	1-218-843-11	METAL CHIP 680 0.5% 1/10W	
R3147	1-218-847-11	METAL CHIP 1K 0.5% 1/10W	

REF.NO.	PART.NO	DESCRIPTION			REMARK
R3148	1-216-864-11	SHORT CHIP	0		
R3149	1-216-818-11	METAL CHIP	560	5%	1/10W
R3150	1-216-815-11	METAL CHIP	330	5%	1/10W
R3151	1-216-815-11	METAL CHIP	330	5%	1/10W
R3152	1-218-865-11	METAL CHIP	5.6K	0.5%	1/10W
R3153	1-218-865-11	METAL CHIP	5.6K	0.5%	1/10W
R3154	1-216-818-11	METAL CHIP	560	5%	1/10W
R3155	1-216-818-11	METAL CHIP	560	5%	1/10W
R3156	1-216-818-11	METAL CHIP	560	5%	1/10W
R3157	1-216-818-11	METAL CHIP	560	5%	1/10W
R3160	1-216-864-11	SHORT CHIP	0		
R3162	1-216-864-11	SHORT CHIP	0		
R3164	1-216-864-11	SHORT CHIP	0		
R3166	1-216-864-11	SHORT CHIP	0		
R3168	1-216-864-11	SHORT CHIP	0		
R3174	1-216-841-11	METAL CHIP	47K	5%	1/10W
R3175	1-216-841-11	METAL CHIP	47K	5%	1/10W
R3186	1-216-841-11	METAL CHIP	47K	5%	1/10W
R3187	1-216-841-11	METAL CHIP	47K	5%	1/10W
R3192	1-216-841-11	METAL CHIP	47K	5%	1/10W
R3193	1-216-841-11	METAL CHIP	47K	5%	1/10W
R3198	1-216-841-11	METAL CHIP	47K	5%	1/10W
R3199	1-216-841-11	METAL CHIP	47K	5%	1/10W
R3214	1-216-864-11	SHORT CHIP	0		
R3223	1-216-821-11	METAL CHIP	1K	5%	1/10W
R3242	1-218-859-11	METAL CHIP	3.3K	0.5%	1/10W
R3244	1-218-859-11	METAL CHIP	3.3K	0.5%	1/10W
R3251	1-216-825-11	METAL CHIP	2.2K	5%	1/10W
R3253	1-218-859-11	METAL CHIP	3.3K	0.5%	1/10W
R3255	1-216-829-11	METAL CHIP	4.7K	5%	1/10W
R3256	1-216-829-11	METAL CHIP	4.7K	5%	1/10W
R3257	1-216-821-11	METAL CHIP	1K	5%	1/10W
R3258	1-216-821-11	METAL CHIP	1K	5%	1/10W
R3259	1-216-864-11	SHORT CHIP	0		
R3267	1-216-829-11	METAL CHIP	4.7K	5%	1/10W
R3268	1-216-821-11	METAL CHIP	1K	5%	1/10W
R3269	1-216-821-11	METAL CHIP	1K	5%	1/10W
R3277	1-216-821-11	METAL CHIP	1K	5%	1/10W
R3278	1-216-821-11	METAL CHIP	1K	5%	1/10W
R3285	1-216-801-11	METAL CHIP	22	5%	1/10W
R3287	1-216-864-11	SHORT CHIP	0		
R3288	1-216-841-11	METAL CHIP	47K	5%	1/10W
R3289	1-216-841-11	METAL CHIP	47K	5%	1/10W
R3292	1-216-864-11	SHORT CHIP	0		
R3292	1-216-864-11	SHORT CHIP	0		
R3293	1-216-864-11	SHORT CHIP	0		
R3294	1-216-864-11	SHORT CHIP	0		
R3295	1-216-864-11	SHORT CHIP	0		
R4200	1-216-805-11	METAL CHIP	47	5%	1/10W
R4201	1-216-801-11	METAL CHIP	22	5%	1/10W
R4209	1-216-864-11	SHORT CHIP	0		
R4211	1-216-801-11	METAL CHIP	22	5%	1/10W
R4212	1-216-833-11	METAL CHIP	10K	5%	1/10W
R4213	1-216-833-11	METAL CHIP	10K	5%	1/10W
R4214	1-216-833-11	METAL CHIP	10K	5%	1/10W
R4215	1-216-864-11	SHORT CHIP	0		
R4216	1-216-864-11	SHORT CHIP	0		
R4219	1-216-833-11	METAL CHIP	10K	5%	1/10W
R4232	1-216-864-11	SHORT CHIP	0		
R4234	1-216-809-11	METAL CHIP	100	5%	1/10W
R4236	1-216-809-11	METAL CHIP	100	5%	1/10W
R4237	1-216-809-11	METAL CHIP	100	5%	1/10W
R4240	1-216-813-11	METAL CHIP	220	5%	1/10W
R4241	1-218-859-11	METAL CHIP	3.3K	0.5%	1/10W
R4242	1-216-813-11	METAL CHIP	220	5%	1/10W
R4243	1-216-813-11	METAL CHIP	220	5%	1/10W
R4244	1-216-805-11	METAL CHIP	47	5%	1/10W
R4249	1-216-814-11	METAL CHIP	270	5%	1/10W
R4250	1-218-842-11	METAL CHIP	620	0.5%	1/10W
R4255	1-216-805-11	METAL CHIP	47	5%	1/10W
R4265	1-216-833-11	METAL CHIP	10K	5%	1/10W
R4267	1-216-864-11	SHORT CHIP	0		
R4268	1-216-833-11	METAL CHIP	10K	5%	1/10W
R4269	1-216-833-11	METAL CHIP	10K	5%	1/10W
R4270	1-216-833-11	METAL CHIP	10K	5%	1/10W
R4271	1-216-833-11	METAL CHIP	10K	5%	1/10W
R4272	1-216-833-11	METAL CHIP	10K	5%	1/10W
R4273	1-216-833-11	METAL CHIP	10K	5%	1/10W
R4277	1-216-864-11	SHORT CHIP	0		
R4310	1-216-801-11	METAL CHIP	22	5%	1/10W
R4311	1-216-864-11	SHORT CHIP	0		
R4312	1-216-864-11	SHORT CHIP	0		
R4313	1-216-864-11	SHORT CHIP	0		
R4314	1-218-857-11	METAL CHIP	2.7K	0.5%	1/10W
R4315	1-218-857-11	METAL CHIP	2.7K	0.5%	1/10W
R4316	1-218-831-11	METAL CHIP	220	0.5%	1/10W
R4317	1-218-831-11	METAL CHIP	220	0.5%	1/10W
R4318	1-218-831-11	METAL CHIP	220	0.5%	1/10W
R4319	1-216-809-11	METAL CHIP	100	5%	1/10W
R4320	1-216-809-11	METAL CHIP	100	5%	1/10W
R4321	1-216-809-11	METAL CHIP	100	5%	1/10W
R4322	1-216-821-11	METAL CHIP	1K	5%	1/10W
R4323	1-216-821-11	METAL CHIP	1K	5%	1/10W
R4324	1-216-821-11	METAL CHIP	1K	5%	1/10W
R4325	1-218-831-11	METAL CHIP	220	0.5%	1/10W
R4326	1-218-831-11	METAL CHIP	220	0.5%	1/10W
R4327	1-218-831-11	METAL CHIP	220	0.5%	1/10W
R4328	1-218-855-11	METAL CHIP	2.2K	0.5%	1/10W
R4329	1-218-847-11	METAL CHIP	1K	0.5%	1/10W
R4330	1-216-809-11	METAL CHIP	100	5%	1/10W

REF.NO.	PART.NO	DESCRIPTION			REMARK
R4331	1-216-809-11	METAL CHIP	100	5%	1/10W
R4332	1-216-809-11	METAL CHIP	100	5%	1/10W
R4334	1-216-809-11	METAL CHIP	100	5%	1/10W
R4335	1-216-809-11	METAL CHIP	100	5%	1/10W
R4336	1-216-809-11	METAL CHIP	100	5%	1/10W
R4337	1-216-809-11	METAL CHIP	100	5%	1/10W
R4338	1-216-807-11	METAL CHIP	68	5%	1/10W
R4423	1-216-825-11	METAL CHIP	2.2K	5%	1/10W
R4424	1-216-829-11	METAL CHIP	4.7K	5%	1/10W
R4425	1-216-825-11	METAL CHIP	2.2K	5%	1/10W
R4427	1-216-829-11	METAL CHIP	4.7K	5%	1/10W
R4429	1-216-864-11	SHORT CHIP	0		
R4430	1-216-864-11	SHORT CHIP	0		
R4434	1-216-864-11	SHORT CHIP	0		
R4435	1-216-864-11	SHORT CHIP	0		
R4436	1-216-864-11	SHORT CHIP	0		
R4439	1-216-833-11	METAL CHIP	10K	5%	1/10W
R4441	1-216-864-11	SHORT CHIP	0		
R4442	1-216-853-11	METAL CHIP	470K	5%	1/10W
R4443	1-216-837-11	METAL CHIP	22K	5%	1/10W
R4444	1-216-813-11	METAL CHIP	220	5%	1/10W
R4445	1-216-815-11	METAL CHIP	330	5%	1/10W
R4446	1-216-813-11	METAL CHIP	220	5%	1/10W
R4447	1-216-809-11	METAL CHIP	100	5%	1/10W
R4448	1-216-821-11	METAL CHIP	1K	5%	1/10W
R4449	1-216-827-11	METAL CHIP	3.3K	5%	1/10W
R4451	1-216-827-11	METAL CHIP	3.3K	5%	1/10W
R4453	1-216-853-11	METAL CHIP	470K	5%	1/10W
R4456	1-216-841-11	METAL CHIP	47K	5%	1/10W
R4457	1-216-841-11	METAL CHIP	47K	5%	1/10W
R4458	1-216-815-11	METAL CHIP	330	5%	1/10W
R4459	1-216-815-11	METAL CHIP	330	5%	1/10W
R4461	1-216-841-11	METAL CHIP	47K	5%	1/10W
R4462	1-216-809-11	METAL CHIP	100	5%	1/10W
R4463	1-216-809-11	METAL CHIP	100	5%	1/10W
R4465	1-216-833-11	METAL CHIP	10K	5%	1/10W
R4466	1-216-809-11	METAL CHIP	100	5%	1/10W
R4467	1-216-809-11	METAL CHIP	100	5%	1/10W
R4468	1-216-809-11	METAL CHIP	100	5%	1/10W
R4472	1-216-833-11	METAL CHIP	10K	5%	1/10W
R4476	1-216-809-11	METAL CHIP	100	5%	1/10W
R4477	1-216-809-11	METAL CHIP	100	5%	1/10W
R4478	1-216-809-11	METAL CHIP	100	5%	1/10W
R4479	1-216-864-11	SHORT CHIP	0		
R4481	1-216-805-11	METAL CHIP	47	5%	1/10W
R4482	1-216-809-11	METAL CHIP	100	5%	1/10W
R4484	1-216-809-11	METAL CHIP	100	5%	1/10W
R4485	1-216-809-11	METAL CHIP	100	5%	1/10W
R4486	1-216-864-11	SHORT CHIP	0		
R4487	1-216-864-11	SHORT CHIP	0		
R4489	1-216-821-11	METAL CHIP	1K	5%	1/10W
R4490	1-216-864-11	SHORT CHIP	0		
R4491	1-216-864-11	SHORT CHIP	0		
R4492	1-216-864-11	SHORT CHIP	0		
R4495	1-216-864-11	SHORT CHIP	0		
R4498	1-216-864-11	SHORT CHIP	0		
R4499	1-216-864-11	SHORT CHIP	0		
R4500	1-216-864-11	SHORT CHIP	0		
R4501	1-216-821-11	METAL CHIP	1K	5%	1/10W
R4541	1-216-864-11	SHORT CHIP	0		
R4542	1-216-864-11	SHORT CHIP	0		
R4543	1-216-864-11	SHORT CHIP	0		
R4544	1-216-864-11	SHORT CHIP	0		
R4545	1-216-864-11	SHORT CHIP	0		
R4546	1-216-864-11	SHORT CHIP	0		
R4547	1-216-805-11	METAL CHIP	47	5%	1/10W
R4548	1-216-821-11	METAL CHIP	1K	5%	1/10W
R4549	1-216-805-11	METAL CHIP	47	5%	1/10W
R4550	1-216-821-11	METAL CHIP	1K	5%	1/10W
R4551	1-216-805-11	METAL CHIP	47	5%	1/10W
R4553	1-216-821-11	METAL CHIP	1K	5%	1/10W
R4555	1-216-821-11	METAL CHIP	1K	5%	1/10W
R4556	1-216-821-11	METAL CHIP	1K	5%	1/10W
R4558	1-216-821-11	METAL CHIP	1K	5%	1/10W
R4559	1-216-821-11	METAL CHIP	1K	5%	1/10W
R4561	1-216-821-11	METAL CHIP	1K	5%	1/10W
R4562	1-216-821-11	METAL CHIP	1K	5%	1/10W
R4564	1-216-821-11	METAL CHIP	1K	5%	1/10W
R4565	1-216-821-11	METAL CHIP	1K	5%	1/10W
R4567	1-216-809-11	METAL CHIP	100	5%	1/10W
R4570	1-216-864-11	SHORT CHIP	0		
R4571	1-216-833-11	METAL CHIP	10K	5%	1/10W
R4572	1-216-805-11	METAL CHIP	47	5%	1/10W
R4573	1-216-833-11	METAL CHIP	10K	5%	1/10W
R4574	1-216-805-11	METAL CHIP	47	5%	1/10W
R4575	1-216-864-11	SHORT CHIP	0		
R4576	1-211-985-11	METAL CHIP	47	0.5%	1/10W
R4577	1-211-985-11	METAL CHIP	47	0.5%	1/10W
R4578	1-211-985-11	METAL CHIP	47	0.5%	1/10W
R4579	1-216-864-11	SHORT CHIP	0		
R4580	1-216-864-11	SHORT CHIP	0		
R4581	1-216-864-11	SHORT CHIP	0		
R4582	1-216-864-11	SHORT CHIP	0		
R4583	1-216-864-11	SHORT CHIP	0		
R4600	1-216-827-11	METAL CHIP	3.3K	5%	1/10W
R4601	1-216-864-11	SHORT CHIP	0		
R4602	1-216-825-11	METAL CHIP	2.2K	5%	1/10W
R4603	1-216-864-11	SHORT CHIP	0		
4607	1-216-833-11	METAL CHIP	10K	5%	1/10W
R4608	1-216-833-11	METAL CHIP	10K	5%	1/10W

REF.NO.	PART.NO	DESCRIPTION			REMARK
R4609	1-216-864-11	SHORT CHIP	0		
R4610	1-216-864-11	SHORT CHIP	0		
R4611	1-216-864-11	SHORT CHIP	0		
R4612	1-216-864-11	SHORT CHIP	0		
R4613	1-216-864-11	SHORT CHIP	0		
R4626	1-216-801-11	METAL CHIP	22	5%	1/10W
R4628	1-216-833-11	METAL CHIP	10K	5%	1/10W
R4629	1-216-833-11	METAL CHIP	10K	5%	1/10W
R4630	1-218-833-11	METAL CHIP	270	0.5%	1/10W
R4632	1-216-864-11	SHORT CHIP	0		
R4633	1-216-864-11	SHORT CHIP	0		
R4634	1-216-833-11	METAL CHIP	10K	5%	1/10W
R4635	1-216-864-11	SHORT CHIP	0		
R4636	1-216-833-11	METAL CHIP	10K	5%	1/10W
R4637	1-216-833-11	METAL CHIP	10K	5%	1/10W
R4638	1-216-833-11	METAL CHIP	10K	5%	1/10W
R4646	1-216-809-11	METAL CHIP	100	5%	1/10W
R4686	1-216-801-11	METAL CHIP	22	5%	1/10W
R4687	1-216-801-11	METAL CHIP	22	5%	1/10W
R4689	1-216-801-11	METAL CHIP	22	5%	1/10W
R4698	1-216-805-11	METAL CHIP	47	5%	1/10W
R4701	1-218-825-11	METAL CHIP	120	0.5%	1/10W
R4702	1-211-989-11	METAL CHIP	68	0.5%	1/10W
R4703	1-211-969-11	METAL CHIP	10	0.5%	1/10W
R4704	1-218-825-11	METAL CHIP	120	0.5%	1/10W
R4705	1-211-990-11	METAL CHIP	75	0.5%	1/10W
R4706	1-211-977-11	METAL CHIP	22	0.5%	1/10W
R4707	1-218-825-11	METAL CHIP	120	0.5%	1/10W
R4708	1-218-823-11	METAL CHIP	100	0.5%	1/10W
R4709	1-211-973-11	METAL CHIP	15	0.5%	1/10W
R4710	1-218-825-11	METAL CHIP	120	0.5%	1/10W
R4711	1-211-990-11	METAL CHIP	75	0.5%	1/10W
R4712	1-211-977-11	METAL CHIP	22	0.5%	1/10W
R4811	1-216-864-11	SHORT CHIP	0		
R4812	1-216-864-11	SHORT CHIP	0		
R4813	1-216-864-11	SHORT CHIP	0		
R4816	1-216-864-11	SHORT CHIP	0		
R4912	1-218-855-11	METAL CHIP	2.2K	0.5%	1/10W
R4913	1-218-855-11	METAL CHIP	2.2K	0.5%	1/10W
R4914	1-218-855-11	METAL CHIP	2.2K	0.5%	1/10W
R4915	1-216-821-11	METAL CHIP	1K	5%	1/10W
R4916	1-216-821-11	METAL CHIP	1K	5%	1/10W
R4917	1-216-821-11	METAL CHIP	1K	5%	1/10W
R4918	1-216-833-11	METAL CHIP	10K	5%	1/10W
R4919	1-216-833-11	METAL CHIP	10K	5%	1/10W

< RESISTOR CHIP >

RB4200	1-239-409-11	NETWORK RESISTOR (CHIP)	47
RB4201	1-239-409-11	NETWORK RESISTOR (CHIP)	47
RB4202	1-239-409-11	NETWORK RESISTOR (CHIP)	47
RB4203	1-239-409-11	NETWORK RESISTOR (CHIP)	47
RB4204	1-239-409-11	NETWORK RESISTOR (CHIP)	47
RB4205	1-239-409-11	NETWORK RESISTOR (CHIP)	47
RB4206	1-239-409-11	NETWORK RESISTOR (CHIP)	47
RB4207	1-239-409-11	NETWORK RESISTOR (CHIP)	47
RB4208	1-239-409-11	NETWORK RESISTOR (CHIP)	47
RB4209	1-239-409-11	NETWORK RESISTOR (CHIP)	47
RB4210	1-239-409-11	NETWORK RESISTOR (CHIP)	47
RB4211	1-239-409-11	NETWORK RESISTOR (CHIP)	47
RB4212	1-239-409-11	NETWORK RESISTOR (CHIP)	47
RB4213	1-239-409-11	NETWORK RESISTOR (CHIP)	47
RB4214	1-239-409-11	NETWORK RESISTOR (CHIP)	47
RB4310	1-233-813-11	RES, NETWORK 150	(3216)
RB4311	1-233-813-11	RES, NETWORK 150	(3216)
RB4312	1-233-813-11	RES, NETWORK 150	(3216)
RB4313	1-233-813-11	RES, NETWORK 150	(3216)
RB4314	1-233-813-11	RES, NETWORK 150	(3216)
RB4315	1-233-813-11	RES, NETWORK 150	(3216)
RB4414	1-234-523-21	RES, CHIP NETWORK 0	(3216)
RB4415	1-234-523-21	RES, CHIP NETWORK 0	(3216)
RB4501	1-239-409-11	NETWORK RESISTOR (CHIP)	47
RB4502	1-239-409-11	NETWORK RESISTOR (CHIP)	47
RB4503	1-239-409-11	NETWORK RESISTOR (CHIP)	47
RB4504	1-239-409-11	NETWORK RESISTOR (CHIP)	47
RB4600	1-239-409-11	NETWORK RESISTOR (CHIP)	47
RB4601	1-239-409-11	NETWORK RESISTOR (CHIP)	47
RB4602	1-239-409-11	NETWORK RESISTOR (CHIP)	47
RB4603	1-239-409-11	NETWORK RESISTOR (CHIP)	47
RB4604	1-239-409-11	NETWORK RESISTOR (CHIP)	47
RB4605	1-239-409-11	NETWORK RESISTOR (CHIP)	47
RB4612	1-233-576-11	RES, CHIP NETWORK 100	
RB4613	1-233-576-11	RES, CHIP NETWORK 100	
RB4616	1-233-576-11	RES, CHIP NETWORK 100	
RB4617	1-233-576-11	RES, CHIP NETWORK 100	
RB4618	1-233-576-11	RES, CHIP NETWORK 100	
RB4619	1-233-576-11	RES, CHIP NETWORK 100	
RB4622	1-239-409-11	NETWORK RESISTOR (CHIP)	47
RB4623	1-233-576-11	RES, CHIP NETWORK 100	
RB4624	1-233-576-11	RES, CHIP NETWORK 100	

< CRYSTAL >

X3100	1-781-723-21	OSCILLATOR, CRYSTAL
X4601	1-795-112-21	VIBRATOR, CRYSTAL

Note : The components identified by shading and marked ⚠ are critical for safety. Replace only with the part numbers specified in the parts list.

* A-1300-687-A G Board, Complete

REF.NO.		PART.NO	DESCRIPTION			REMARK
		*4-042-408-01	PIN, COATING LEAD			
		4-382-854-01	SCREW (M3X8), P, SW (+)			
		4-382-854-01	SCREW (M3X8), P, SW (+)			
			< CAPACITOR >			
C6001	⚠	1-165-439-11	FILM	0.47UF		275V
C6002	⚠	1-165-439-11	FILM	0.47UF		275V
C6003	⚠	1-119-888-51	CERAMIC	2200PF	20.00%	250V
C6004	⚠	1-119-888-51	CERAMIC	2200PF	20.00%	250V
C6006		1-117-753-11	ELECT(BLOCK)	470UF	20.00%	450V
C6007		1-126-964-11	ELECT	10UF	20.00%	50V
C6008		1-126-963-11	ELECT	4.7UF	20.00%	50V
C6010		1-136-165-00	FILM	0.1UF	5.00%	50V
C6011		1-162-964-11	CERAMIC CHIP	0.001UF	10.00%	50V
C6012	⚠	1-161-830-00	CERAMIC	0.0047UF		500V
C6013	⚠	1-161-830-00	CERAMIC	0.0047UF		500V
C6014		1-113-610-11	ELECT(BLOCK)	220UF	20.00%	250V
C6015		1-115-339-11	CERAMIC CHIP	0.1UF	10.00%	50V
C6016		1-161-830-00	CERAMIC	0.0047UF		500V
C6017		1-161-830-00	CERAMIC	0.0047UF		500V
C6018		1-126-949-11	ELECT	220UF	20.00%	35V
C6020		1-135-946-21	FILM	47000PF	3%	800V
C6021		1-164-645-11	CERAMIC	1000PF	10.00%	500V
C6022		1-126-963-11	ELECT	4.7UF	20.00%	50V
C6023		1-110-626-11	ELECT	330UF	20.00%	160V
C6024		1-164-625-11	CERAMIC	680PF	10.00%	500V
C6025		1-164-625-11	CERAMIC	680PF	10.00%	500V
C6026		1-164-625-11	CERAMIC	680PF	10.00%	500V
C6027		1-164-625-11	CERAMIC	680PF	10.00%	500V
C6028		1-100-197-11	MYLAR	0.0015UF	5.00%	16V
C6029		1-100-197-11	MYLAR	0.0015UF	5.00%	16V
C6030		1-126-944-11	ELECT	3300UF	20.00%	25V
C6031		1-126-944-11	ELECT	3300UF	20.00%	25V
C6032	⚠	1-113-927-11	CERAMIC	0.01UF		250V
C6033		1-162-964-11	CERAMIC CHIP	0.001UF	10.00%	50V
C6035		1-136-165-00	FILM	0.1UF	5.00%	50V
C6036		1-136-479-11	FILM	0.001UF	5.00%	100V
C6037		1-126-947-11	ELECT	47UF	20.00%	35V
C6038		1-164-645-11	CERAMIC	1000PF	10.00%	500V
C6039		1-125-891-11	CERAMIC CHIP	0.47UF	10.00%	10V
C6040		1-115-340-11	CERAMIC CHIP	0.22UF	10.00%	25V
C6045		1-115-339-11	CERAMIC CHIP	0.1UF	10.00%	50V
C6102		1-126-943-11	ELECT	2200UF	20.00%	25V
C6103		1-126-971-11	ELECT	470UF	20.00%	50V
C6105		1-126-964-11	ELECT	10UF	20.00%	50V
C6106		1-126-964-11	ELECT	10UF	20.00%	50V
			< CONNECTOR >			
CN6001	⚠	*1-691-291-11	PIN, CONNECTOR (PC BOARD) 5P			
CN6002	⚠	*1-508-786-00	PIN, CONNECTOR (5MM PITCH) 2P			
CN6003	⚠	*1-508-765-00	PIN, CONNECTOR (5MM PITCH) 3P			
CN6004	⚠	*1-691-960-11	PIN, CONNECTOR (PC BOARD) 3P			
CN6005		*1-564-509-11	PLUG, CONNECTOR 6P			
CN6006		*1-564-516-11	PLUG, CONNECTOR 13P			
CN6007	⚠	1-580-843-11	PIN, CONNECTOR (POWER)			
CN6008		*1-564-508-11	PLUG, CONNECTOR 5P			
CN6010		*1-564-511-11	PLUG, CONNECTOR 8P			
CN6013		*1-564-506-11	PLUG, CONNECTOR 3P			
CN6014		1-695-915-11	TAB (CONTACT)			
CN6015		1-695-915-11	TAB (CONTACT)			
			< DIODE >			
D6001		6-500-067-01	DIODE GSIB460L/45			
D6002		8-719-982-26	DIODE MTZJ-33B			
D6004		8-719-979-64	DIODE UF4005PKG23			
D6008		8-719-063-70	DIODE D1NL20U			
D6009		8-719-110-41	DIODE RD15ESB2			
D6010		8-719-085-24	DIODE FBIU4D7M1-B			
D6011		8-719-033-12	DIODE S3L40F			
D6012		8-719-033-12	DIODE S3L40F			
D6014		8-719-083-92	DIODE YG802C09RF122			
D6015		8-719-085-10	DIODE FMB-24LF654			
D6016		8-719-312-47	DIODE RBA-406B			
D6035		8-719-510-02	DIODE D1NS4			
D6036		8-719-081-97	DIODE MMDL914T1			
D6101		8-719-081-97	DIODE MMDL914T1			
D6102		8-719-511-40	DIODE S1VB40			
D6103		8-719-081-97	DIODE MMDL914T1			
D6104		8-719-081-97	DIODE MMDL914T1			
D6105		8-719-081-97	DIODE MMDL914T1			
D6106		8-719-081-97	DIODE MMDL914T1			
D6107		8-719-081-97	DIODE MMDL914T1			
			< FERRITE BEAD >			
FB6001		1-410-397-21	FERRITE	1.1UH		
FB6002		1-410-397-21	FERRITE	1.1UH		
FB6003		1-410-397-21	FERRITE	1.1UH		
FB6004		1-410-397-21	FERRITE	1.1UH		
FB6005		1-535-303-00	LEAD, JUMPER (5.0MM)			
FB6006		1-535-303-00	LEAD, JUMPER (5.0MM)			
			< IC >			
IC6001		8-759-670-30	IC MCZ3001D			
IC6003		8-749-016-19	IC SE135N-LF4			

Note : The components identified by shading and marked ⚠ are critical for safety. Replace only with the part numbers specified in the parts list.

REF.NO.	PART.NO	DESCRIPTION	REMARK
	< COIL >		
L6001	1-406-663-21	INDUCTOR 47UH	
L6002	1-412-521-31	INDUCTOR 4.7UH	
L6003	1-412-521-31	INDUCTOR 4.7UH	
L6004	1-535-303-00	LEAD, JUMPER (5.0MM)	
L6005	1-535-303-00	LEAD, JUMPER (5.0MM)	
L6006	1-406-659-11	INDUCTOR 10UH	
L6007	1-412-525-31	INDUCTOR 10UH	
L6008	1-406-670-11	INDUCTOR 680UH	
	< PHOTOCOUPLER >		
PH6001 ⚠	8-749-016-21	IC TCET1103G	
	< TRANSISTOR >		
Q6003	8-729-010-29	TRANSISTOR MSD601-RST1	
Q6006	6-550-146-01	TRANSISTOR SPA07N60C2-E8152	
Q6007	6-550-146-01	TRANSISTOR SPA07N60C2-E8152	
Q6101	8-729-029-56	TRANSISTOR DTA144ESA	
Q6102	8-729-010-29	TRANSISTOR MSD601-RST1	
Q6103	8-729-029-56	TRANSISTOR DTA144ESA	
Q6104	8-729-010-29	TRANSISTOR MSD601-RST1	
Q6105	8-729-010-29	TRANSISTOR MSD601-RST1	
	< RESISTOR >		
JR6002	1-216-295-91	SHORT CHIP 0	
JR6004	1-216-295-91	SHORT CHIP 0	
R6003 ⚠	1-202-933-61	FUSIBLE 0.1 10%	1/2W
R6004 ⚠	1-205-998-11	CEMENTED 1 5%	10W
R6005 ⚠	1-205-998-11	CEMENTED 1 5%	10W
R6006 ⚠	1-205-998-11	CEMENTED 1 5%	10W
R6007	1-243-979-21	METAL OXIDE 0.1 5%	2W
R6008	1-243-979-21	METAL OXIDE 0.1 5%	2W
R6009	1-216-687-11	METAL CHIP 33K 0.5%	1/10W
R6010	1-215-481-00	METAL 330K 1%	1/4W
R6013 ⚠	1-218-265-11	METAL 8.2M 5%	1W
R6014	1-215-926-00	METAL OXIDE 33K 5%	3W
R6015	1-208-757-11	METAL CHIP 91 0.5%	1/10W
R6021	1-216-362-11	METAL OXIDE 0.27 5%	2W
R6022	1-216-833-11	METAL CHIP 10K 5%	1/10W
R6024	1-216-615-11	METAL CHIP 33 0.5%	1/10W
R6028	1-249-389-11	CARBON 4.7 5%	1/4W
R6029	1-216-833-11	METAL CHIP 10K 5%	1/10W
R6030	1-216-817-11	METAL CHIP 470 5%	1/10W
R6032	1-249-417-11	CARBON 1K 5%	1/4W
R6033	1-215-481-00	METAL 330K 1%	1/4W
R6035	1-260-083-11	CARBON 47 5%	1/2W
R6036	1-216-817-11	METAL CHIP 470 5%	1/10W
R6037	1-249-405-11	CARBON 100 5%	1/4W
R6038	1-208-830-11	METAL CHIP 100K 0.5%	1/10W
R6039	1-208-830-11	METAL CHIP 100K 0.5%	1/10W
R6040	1-208-814-91	METAL CHIP 22K 0.5%	1/10W
R6042	1-216-295-91	SHORT CHIP 0	
R6045	1-216-639-11	METAL CHIP 330 0.5%	1/10W
R6047	1-216-681-11	METAL CHIP 18K 0.5%	1/10W
R6048	1-215-481-00	METAL 330K 1%	1/4W
R6049	1-208-805-11	METAL CHIP 9.1K 0.5%	1/10W
R6050	1-208-758-11	METAL CHIP 100 0.5%	1/10W
R6054	1-216-615-11	METAL CHIP 33 0.5%	1/10W
R6056	1-216-295-91	SHORT CHIP 0	
R6057	1-208-798-11	METAL CHIP 4.7K 0.5%	1/10W
R6101	1-216-821-11	METAL CHIP 1K 5%	1/10W
R6102	1-216-829-11	METAL CHIP 4.7K 5%	1/10W
R6103	1-216-821-11	METAL CHIP 1K 5%	1/10W
R6104	1-216-821-11	METAL CHIP 1K 5%	1/10W
R6105	1-216-821-11	METAL CHIP 1K 5%	1/10W
R6106	1-216-829-11	METAL CHIP 4.7K 5%	1/10W
R6107	1-216-829-11	METAL CHIP 4.7K 5%	1/10W
R6108	1-216-821-11	METAL CHIP 1K 5%	1/10W
R6109	1-216-829-11	METAL CHIP 4.7K 5%	1/10W
R6110	1-216-821-11	METAL CHIP 1K 5%	1/10W
	< RELAY >		
RY6001 ⚠	1-755-395-11	RELAY (AC POWER)	
RY6002 ⚠	1-755-389-11	RELAY (AC POWER)	
	< TRANSFORMER >		
T6001 ⚠	1-431-402-11	TRANSFORMER, LINE FILTER	
T6002 ⚠	1-437-443-11	TRANSFORMER, CONVERTER (PIT)	
T6003 ⚠	1-431-402-11	TRANSFORMER, LINE FILTER	
T6101 ⚠	1-437-483-11	TRANSFORMER, STANDBY	
	< THERMISTOR >		
TH6002 ⚠	1-804-650-11	THERMISTOR, POSITIVE	

* A-1304-241-A MS2 Board, Complete

	*4-396-124-01	HOLDER (E), LED	
	< CAPACITOR >		
C405	1-164-156-11	CERAMIC CHIP 0.1UF	25V
C406	1-163-021-91	CERAMIC CHIP 0.01UF 10.00%	50V
C408	1-124-779-00	ELECT CHIP 10UF 20.00%	16V
C409	1-164-156-11	CERAMIC CHIP 0.1UF	25V
C410	1-163-021-91	CERAMIC CHIP 0.01UF 10.00%	50V
C412	1-164-156-11	CERAMIC CHIP 0.1UF	25V
C413	1-126-390-11	ELECT CHIP 22UF 20.00%	6.3V
C414	1-107-826-11	CERAMIC CHIP 0.1UF 10.00%	16V
C415	1-107-826-11	CERAMIC CHIP 0.1UF 10.00%	16V

REF.NO.	PART.NO	DESCRIPTION	REMARK
C416	1-107-826-11	CERAMIC CHIP 0.1UF	10.00% 16V
C417	1-126-390-11	ELECT CHIP 22UF	20.00% 6.3V
C419	1-162-970-11	CERAMIC CHIP 0.01UF	10.00% 25V
C420	1-162-970-11	CERAMIC CHIP 0.01UF	10.00% 25V
	< CONNECTOR >		
CN401	*1-816-104-12	CONNECTOR MEMORY STICK	
CN402	*1-816-124-11	PIN, CONNECTOR (FOR PWB) 18P	
	< DIODE >		
D401	8-719-421-69	DIODE MA133	
D402	8-719-421-69	DIODE MA133	
D403	8-719-421-69	DIODE MA133	
D404	8-719-421-69	DIODE MA133	
D405	8-719-421-69	DIODE MA133	
D406	8-719-421-69	DIODE MA133	
D407	8-719-421-69	DIODE MA133	
D408	8-719-421-69	DIODE MA133	
D409	8-719-071-30	DIODE TLSU113P	
D410	8-719-158-02	DIODE RD3.9SB2	
D411	8-719-158-02	DIODE RD3.9SB2	
D412	8-719-421-69	DIODE MA133	
D413	8-719-421-69	DIODE MA133	
D414	8-719-421-69	DIODE MA133	
D415	8-719-421-69	DIODE MA133	
D416	8-719-421-69	DIODE MA133	
D417	8-719-421-69	DIODE MA133	
	< FERRITE BEAD >		
FB401	1-414-921-11	FERRITE 0UH	
FB402	1-414-921-11	FERRITE 0UH	
FB403	1-414-921-11	FERRITE 0UH	
FB404	1-414-921-11	FERRITE 0UH	
	< IC >		
IC401	8-759-639-86	IC SN65LVDS32DR	
IC402	6-701-763-11	IC DS90LV017ATMX	
IC403	8-759-698-08	IC SN74CBTLV1G125DCKR	
	< COIL >		
L401	1-419-370-21	INDUCTOR 0UH	
L402	1-419-370-21	INDUCTOR 0UH	
L403	1-419-370-21	INDUCTOR 0UH	
L404	1-419-370-21	INDUCTOR 0UH	
L405	1-419-370-21	INDUCTOR 0UH	
	< TRANSISTOR >		
Q401	8-729-140-63	TRANSISTOR 2SA1611-M5M6	
Q402	8-729-029-14	TRANSISTOR DTC144EUA-T106	
Q403	8-729-216-22	TRANSISTOR 2SA1162-G	

REF.NO.	PART.NO	DESCRIPTION			
	< RESISTOR >				
R401	1-216-801-11	METAL CHIP	22	5%	1/10W
R402	1-216-801-11	METAL CHIP	22	5%	1/10W
R404	1-216-801-11	METAL CHIP	22	5%	1/10W
R405	1-218-692-11	METAL CHIP	1K	0.5%	1/16W
R406	1-216-809-11	METAL CHIP	100	5%	1/10W
R407	1-216-809-11	METAL CHIP	100	5%	1/10W
R408	1-216-809-11	METAL CHIP	100	5%	1/10W
R409	1-216-809-11	METAL CHIP	100	5%	1/10W
R410	1-216-803-11	METAL CHIP	33	5%	1/10W
R421	1-216-821-11	METAL CHIP	1K	5%	1/10W
R422	1-216-809-11	METAL CHIP	100	5%	1/10W
R424	1-216-833-11	METAL CHIP	10K	5%	1/10W
R425	1-216-845-11	METAL CHIP	100K	5%	1/10W
R426	1-218-871-11	METAL CHIP	10K	0.5%	1/10W
R428	1-216-864-11	SHORT CHIP	0		
R431	1-216-864-11	SHORT CHIP	0		

* A-1400-475-A H3 Board, Complete

	< CAPACITOR >			
C900	1-102-074-00	CERAMIC	0.001UF	10.00% 50V
C901	1-102-074-00	CERAMIC	0.001UF	10.00% 50V
C902	1-102-074-00	CERAMIC	0.001UF	10.00% 50V
C903	1-102-074-00	CERAMIC	0.001UF	10.00% 50V
C906	1-126-960-11	ELECT	1UF	20.00% 50V
C907	1-126-960-11	ELECT	1UF	20.00% 50V
C908	1-102-106-00	CERAMIC	100PF	10.00% 50V
C909	1-102-106-00	CERAMIC	100PF	10.00% 50V
C911	1-102-074-00	CERAMIC	0.001UF	10.00% 50V
C912	1-102-074-00	CERAMIC	0.001UF	10.00% 50V
	< CONNECTOR >			
CN900	1-779-947-11	TERMINAL BLOCK, S		
CN907	1-764-334-11	PIN, CONNECTOR(PCB)(V TYPE)11P		
CN909	*1-564-510-11	PLUG, CONNECTOR 7P		
	< DIODE >			
D902	8-719-929-15	DIODE HZS9.1NB2		
D903	8-719-929-15	DIODE HZS9.1NB2		
D904	8-719-109-97	DIODE RD6.8ESB2		
D905	8-719-109-97	DIODE RD6.8ESB2		
	< SOCKET >			
J900	1-750-264-11	JACK		
	< COIL >			
L900	1-535-303-00	LEAD, JUMPER (5.0MM)		
L901	1-535-303-00	LEAD, JUMPER (5.0MM)		

Note : The components identified by shading and marked ⚠ are critical for safety. Replace only with the part numbers specified in the parts list.

REF.NO.	PART.NO	DESCRIPTION	REMARK
L902	1-408-603-31	INDUCTOR 10UH	
L903	1-408-603-31	INDUCTOR 10UH	
L904	1-410-119-11	INDUCTOR 1MH	
		< RESISTOR >	
R903	1-249-406-11	CARBON 120 5% 1/4W	
R904	1-249-406-11	CARBON 120 5% 1/4W	
R905	1-247-895-91	CARBON 470K 5% 1/4W	
R906	1-247-895-91	CARBON 470K 5% 1/4W	
R909	1-247-895-91	CARBON 470K 5% 1/4W	
R910	1-247-895-91	CARBON 470K 5% 1/4W	
R915	1-249-406-11	CARBON 120 5% 1/4W	
R916	1-249-406-11	CARBON 120 5% 1/4W	
R917	1-247-807-31	CARBON 100 5% 1/4W	
R918	1-247-807-31	CARBON 100 5% 1/4W	
		< SWITCH >	
S900	1-692-431-21	SWITCH, TACTILE	
S901	1-692-431-21	SWITCH, TACTILE	
S902	1-692-431-21	SWITCH, TACTILE	
S903	1-692-431-21	SWITCH, TACTILE	
S904	1-692-431-21	SWITCH, TACTILE	
S905	1-692-431-21	SWITCH, TACTILE	

* A-1401-053-A F3 Board, Complete

	4-205-711-01	HOLDER, LED	
	*4-374-846-01	COVER, CAPACITOR, CAP TYPE	
		< CAPACITOR >	
C2150	1-126-969-11	ELECT 220UF 20.00% 50V	
C2601	1-113-924-11	CERAMIC 0.0047UF 20.00% 250V	
		< CONNECTOR >	
CN2151	*1-564-507-11	PLUG, CONNECTOR 4P	
CN2601 ⚠	*1-580-844-11	PIN, CONNECTOR (POWER)	
CN2602	1-695-915-11	TAB (CONTACT)	
CN2603 ⚠	*1-691-291-11	PIN, CONNECTOR (PC BOARD) 5P	
		< DIODE >	
D2150	8-719-081-56	DIODE L-59SRSGC-CC	
D2151	8-719-109-89	DIODE RD5.6ESB2	
D2152	8-719-109-89	DIODE RD5.6ESB2	
		< FUSE >	
F2601 ⚠	1-576-233-41	FUSE (H.B.C.)	
⚠	1-533-725-11	HOLDER, FUSE (F2601)	
		< IC >	
IC2150	8-742-180-30	HYB IC SBX3081-51(30)	
		< TRANSISTOR >	
Q2150	8-729-027-38	TRANSISTOR DTA144EKA-T146	
Q2151	8-729-900-53	TRANSISTOR DTC114EK	
		< RESISTOR >	
R2150	1-216-813-11	METAL CHIP 220 5% 1/10W	
R2151	1-216-813-11	METAL CHIP 220 5% 1/10W	
R2152	1-216-841-11	METAL CHIP 47K 5% 1/10W	
R2153	1-216-829-11	METAL CHIP 4.7K 5% 1/10W	
R2154	1-216-825-11	METAL CHIP 2.2K 5% 1/10W	
R2155	1-216-809-11	METAL CHIP 100 5% 1/10W	
R2156	1-216-815-11	METAL CHIP 330 5% 1/10W	
R2601 ⚠	1-202-719-00	SOLID 1M 10% 1/2W	
		< SWITCH >	
S2601 ⚠	1-571-433-21	SWITCH, PUSH (AC POWER)	
		< VARISTOR >	
VD2601 ⚠	1-803-830-11	VARISTOR (ERZV14D621)	

* A-1401-264-A C1 Board, Complete

	4-382-854-01	SCREW (M3X8), P, SW (+)	
		< CAPACITOR >	
C9004	1-115-350-51	CERAMIC 0.0047UF 2KV	
C9009	1-163-237-11	CERAMIC CHIP 27PF 5.00% 50V	
C9010	1-163-237-11	CERAMIC CHIP 27PF 5.00% 50V	
C9011	1-161-830-00	CERAMIC 0.0047UF 500V	
C9012	1-161-830-00	CERAMIC 0.0047UF 500V	
C9014	1-161-830-00	CERAMIC 0.0047UF 500V	
C9015	1-163-237-11	CERAMIC CHIP 27PF 5.00% 50V	
C9016	1-535-143-71	LEAD, JUMPER (7.5MM)	
C9018	1-107-961-91	ELECT 10UF 20.00% 250V	
C9019	1-164-004-11	CERAMIC CHIP 0.1UF 10.00% 25V	
C9020	1-107-961-91	ELECT 10UF 20.00% 250V	
C9021	1-107-961-91	ELECT 10UF 20.00% 250V	
C9022	1-101-004-00	CERAMIC 0.01UF 50V	
C9023	1-101-004-00	CERAMIC 0.01UF 50V	
C9024	1-164-004-11	CERAMIC CHIP 0.1UF 10.00% 25V	
C9025	1-104-653-11	ELECT 220UF 20.00% 16V	
C9026	1-164-004-11	CERAMIC CHIP 0.1UF 10.00% 25V	
C9027	1-101-004-00	CERAMIC 0.01UF 50V	
C9031	1-115-350-51	CERAMIC 0.0047UF 2KV	
C9032	1-162-116-00	CERAMIC 680PF 10.00% 2KV	
C9033	1-107-662-11	ELECT 22UF 20.00% 350V	
C9042	1-126-940-11	ELECT 330UF 20.00% 25V	
C9044	1-126-934-11	ELECT 220UF 20.00% 16V	
C9045	1-164-004-11	CERAMIC CHIP 0.1UF 10.00% 25V	

Note : The components identified by shading and marked ⚠ are critical for safety. Replace only with the part numbers specified in the parts list.

REF.NO.	PART.NO	DESCRIPTION	REMARK
C9048	1-164-004-11	CERAMIC CHIP 0.1UF	10.00% 25V
C9049	1-164-004-11	CERAMIC CHIP 0.1UF	10.00% 25V
C9050	1-164-004-11	CERAMIC CHIP 0.1UF	10.00% 25V
C9051	1-535-303-00	LEAD, JUMPER (5.0MM)	
		< CONNECTOR >	
CN9001	*1-564-511-11	PLUG, CONNECTOR 8P	
CN9002	*1-564-508-11	PLUG, CONNECTOR 5P	
CN9004	1-695-915-11	TAB (CONTACT)	
CN9009	1-695-915-11	TAB (CONTACT)	
		< DIODE >	
D9005	8-719-404-50	DIODE MA111-TX	
D9006	8-719-051-85	DIODE HSS83TD	
D9007	8-719-051-85	DIODE HSS83TD	
D9008	8-719-051-85	DIODE HSS83TD	
D9009	8-719-908-03	DIODE GP08D	
D9010	8-719-110-17	DIODE RD10ESB2	
D9018	1-163-247-91	CERAMIC CHIP 68PF	5.00% 50V
D9019	1-163-247-91	CERAMIC CHIP 68PF	5.00% 50V
D9020	1-163-247-91	CERAMIC CHIP 68PF	5.00% 50V
		< IC >	
IC9001	8-759-680-01	IC TDA6120Q/N2/S1	
IC9002	8-759-680-01	IC TDA6120Q/N2/S1	
IC9003	8-759-680-01	IC TDA6120Q/N2/S1	
		< SOCKET >	
J9002 ⚠	1-251-732-11	SOCKET, CRT	
		< COIL >	
L9001	1-535-303-00	LEAD, JUMPER (5.0MM)	
L9002	1-408-399-00	INDUCTOR 1.5UH	
L9003	1-408-592-11	INDUCTOR 1.2UH	
L9004	1-408-592-11	INDUCTOR 1.2UH	
L9005	1-406-666-21	INDUCTOR 150UH	
L9006	1-535-303-00	LEAD JUMPER (5.0MM)	
NL9001	1-535-303-00	LEAD, JUMPER (5.0MM)	
NL9002	1-535-303-00	LEAD, JUMPER (5.0MM)	
		< TRANSISTOR >	
Q9001	8-729-120-28	TRANSISTOR 2SC1623-L5L6	
Q9007	8-729-141-73	TRANSISTOR 2SC3624A-T1L15L16	
Q9009	8-729-424-02	TRANSISTOR 2SB709A-QRS-TX	
Q9010	8-729-424-02	TRANSISTOR 2SB709A-QRS-TX	
Q9011	8-729-424-02	TRANSISTOR 2SB709A-QRS-TX	
Q9013	8-729-141-73	TRANSISTOR 2SC3624A-T1L15L16	
Q9015	8-729-141-73	TRANSISTOR 2SC3624A-T1L15L16	

REF.NO.	PART.NO	DESCRIPTION	REMARK
		< RESISTOR >	
R9001	1-216-633-11	METAL CHIP 180 0.5%	1/10W
R9003	1-535-303-00	LEAD, JUMPER (5.0MM)	
R9006	1-249-429-11	CARBON 10K 5%	1/4W
R9007	1-216-655-11	METAL CHIP 1.5K 0.5%	1/10W
R9008	1-216-073-91	RES-CHIP 10K 5%	1/10W
R9012	1-535-303-00	LEAD, JUMPER (5.0MM)	
R9017	1-535-303-00	LEAD, JUMPER (5.0MM)	
R9018	1-216-633-11	METAL CHIP 180 0.5%	1/10W
R9019	1-216-633-11	METAL CHIP 180 0.5%	1/10W
R9020	1-216-025-11	RES-CHIP 100 5%	1/10W
R9021	1-216-103-00	RES-CHIP 180K 5%	1/10W
R9022	1-216-073-91	RES-CHIP 10K 5%	1/10W
R9023	1-216-103-00	RES-CHIP 180K 5%	1/10W
R9024	1-535-303-00	LEAD, JUMPER (5.0MM)	
R9025	1-216-025-11	RES-CHIP 100 5%	1/10W
R9026	1-216-655-11	METAL CHIP 1.5K 0.5%	1/10W
R9027	1-216-103-00	RES-CHIP 180K 5%	1/10W
R9028	1-216-103-00	RES-CHIP 180K 5%	1/10W
R9029	1-216-073-91	RES-CHIP 10K 5%	1/10W
R9030	1-216-073-91	RES-CHIP 10K 5%	1/10W
R9031	1-216-655-11	METAL CHIP 1.5K 0.5%	1/10W
R9032	1-216-103-00	RES-CHIP 180K 5%	1/10W
R9033	1-215-435-00	METAL 3.9K 1%	1/4W
R9034	1-215-428-00	METAL 2K 1%	1/4W
R9035	1-216-103-00	RES-CHIP 180K 5%	1/10W
R9036	1-216-083-00	RES-CHIP 27K 5%	1/10W
R9037	1-215-926-00	METAL OXIDE 33K 5%	3W
R9038	1-535-303-00	LEAD, JUMPER (5.0MM)	
R9039	1-216-025-11	RES-CHIP 100 5%	1/10W
R9040	1-535-143-31	LEAD, JUMPER (15.0MM)	
R9041	1-216-083-00	RES-CHIP 27K 5%	1/10W
R9042	1-216-083-00	RES-CHIP 27K 5%	1/10W
R9043	1-215-926-00	METAL OXIDE 33K 5%	3W
R9044	1-215-926-00	METAL OXIDE 33K 5%	3W
R9045	1-535-303-00	LEAD, JUMPER (5.0MM)	
R9046	1-535-303-00	LEAD, JUMPER (5.0MM)	
R9047	1-202-557-00	SOLID 220 20%	1/2W
R9048	1-216-049-11	RES-CHIP 1K 5%	1/10W
R9049	1-216-049-11	RES-CHIP 1K 5%	1/10W
R9051	1-202-557-00	SOLID 220 20%	1/2W
R9052	1-202-557-00	SOLID 220 20%	1/2W
R9056	1-202-549-00	SOLID 100 20%	1/2W
R9057	1-202-847-00	SOLID 560K 20%	1/2W
R9059	1-202-818-00	SOLID 1K 20%	1/2W
R9061	1-202-549-00	SOLID 100 20%	1/2W
R9069	1-535-143-31	LEAD, JUMPER (15.0MM)	
R9070	1-247-807-31	CARBON 100 5%	1/4W
R9071	1-247-807-31	CARBON 100 5%	1/4W

REF.NO.	PART.NO	DESCRIPTION	REMARK
R9072	1-247-807-31	CARBON 100 5%	1/4W
R9073	1-216-049-11	RES-CHIP 1K 5%	1/10W
R9092	1-216-295-91	SHORT CHIP 0	
R9094	1-216-295-91	SHORT CHIP 0	
R9095	1-216-295-91	SHORT CHIP 0	
R9098	1-535-303-00	LEAD, JUMPER (5.0MM)	
R9099	1-535-303-00	LEAD, JUMPER (5.0MM)	
R9100	1-535-303-00	LEAD, JUMPER (5.0MM)	
R9101	1-535-303-00	LEAD, JUMPER (5.0MM)	
R9102	1-216-864-11	SHORT CHIP 0	
R9103	1-216-839-11	METAL CHIP 33K 5%	1/10W
R9104	1-216-839-11	METAL CHIP 33K 5%	1/10W
R9105	1-216-839-11	METAL CHIP 33K 5%	1/10W
		< RESISTOR VARIABLE >	
RV9001	1-241-714-11	RES, ADJ, METAL FILM 110M	
		< SPARK GAP >	
SG9003	1-519-421-11	GAP, DISCHARGE	

*** A-1401-265-A H Board, Complete**

		< CAPACITOR >	
C300	1-107-826-11	CERAMIC CHIP 0.1UF	10.00% 16V
C301	1-162-947-11	CERAMIC CHIP 33PF	5.00% 50V
C302	1-162-927-11	CERAMIC CHIP 100PF	5.00% 50V
C303	1-126-947-11	ELECT 47UF	20.00% 35V
C305	1-126-947-11	ELECT 47UF	20.00% 35V
		< CONNECTOR >	
CN300	*1-564-510-11	PLUG, CONNECTOR 7P	
CN301	*1-564-507-11	PLUG, CONNECTOR 4P	
CN302	*1-564-511-11	PLUG, CONNECTOR 8P	
		< DIODE >	
D300	8-719-978-33	DIODE DTZ-TT11-6.8B	
D301	8-719-069-54	DIODE UDZSTE-175.1B	
D302	8-719-914-43	DIODE DAN202K	
D303	8-719-069-54	DIODE UDZSTE-175.1B	
D304	8-719-069-54	DIODE UDZSTE-175.1B	
D305	8-719-069-54	DIODE UDZSTE-175.1B	
D306	8-719-069-54	DIODE UDZSTE-175.1B	
D307	8-719-069-54	DIODE UDZSTE-175.1B	
D308	8-719-083-60	DIODE UDZSTE-174.7B	
		< IC >	
IC300	8-752-412-99	IC CXD2088Q-T4	
		< TRANSISTOR >	
Q300	8-729-120-28	TRANSISTOR 2SC1623-L5L6	
		< RESISTOR >	
R300	1-216-833-11	METAL CHIP 10K 5%	1/10W
R301	1-216-809-11	METAL CHIP 100 5%	1/10W
R302	1-216-809-11	METAL CHIP 100 5%	1/10W
R304	1-216-809-11	METAL CHIP 100 5%	1/10W
R305	1-216-813-11	METAL CHIP 220 5%	1/10W
R306	1-216-864-11	SHORT CHIP 0	
R307	1-216-809-11	METAL CHIP 100 5%	1/10W
R308	1-216-809-11	METAL CHIP 100 5%	1/10W
R309	1-216-829-11	METAL CHIP 4.7K 5%	1/10W
R310	1-216-809-11	METAL CHIP 100 5%	1/10W
R311	1-216-809-11	METAL CHIP 100 5%	1/10W
R312	1-216-817-11	METAL CHIP 470 5%	1/10W
R313	1-216-809-11	METAL CHIP 100 5%	1/10W
R314	1-216-809-11	METAL CHIP 100 5%	1/10W
R315	1-216-809-11	METAL CHIP 100 5%	1/10W
R316	1-216-825-11	METAL CHIP 2.2K 5%	1/10W
R317	1-216-825-11	METAL CHIP 2.2K 5%	1/10W
R318	1-216-825-11	METAL CHIP 2.2K 5%	1/10W
R319	1-216-825-11	METAL CHIP 2.2K 5%	1/10W
R320	1-216-825-11	METAL CHIP 2.2K 5%	1/10W
R321	1-216-825-11	METAL CHIP 2.2K 5%	1/10W
R322	1-216-864-11	SHORT CHIP 0	
R323	1-216-838-11	METAL CHIP 27K 5%	1/10W
R324	1-216-833-11	METAL CHIP 10K 5%	1/10W
		< CRYSTAL >	
X300	1-579-126-11	VIBRATOR, CERAMIC	

*** A-1401-378-A A Board, Complete**

	4-201-023-01	SPACER, INSULATING	
	4-202-373-01	SPRING, IC	
	*4-206-387-11	SHIELD BASE, N	
	4-382-854-01	SCREW (M3X8), P, SW (+)	
		< CAPACITOR >	
C1001	1-164-004-11	CERAMIC CHIP 0.1UF	10.00% 25V
C1002	1-126-935-11	ELECT 470UF	20.00% 16V
C1003	1-126-935-11	ELECT 470UF	20.00% 16V
C1006	1-136-495-11	FILM 0.068UF	5.00% 50V
C1007	1-136-495-11	FILM 0.068UF	5.00% 50V
C1008	1-104-665-11	ELECT 100UF	20.00% 25V
C1009	1-164-004-11	CERAMIC CHIP 0.1UF	10.00% 25V
C1010	1-126-916-11	ELECT 1000UF	20.00% 6.3V
C1011	1-126-916-11	ELECT 1000UF	20.00% 6.3V
C1012	1-126-935-11	ELECT 470UF	20.00% 16V

REF.NO.	PART.NO	DESCRIPTION	REMARK
C1013	1-126-935-11	ELECT 470UF	20.00% 16V
C1014	1-126-957-11	ELECT 0.22UF	20.00% 50V
C1017	1-104-661-91	ELECT 330UF	20.00% 16V
C1018	1-162-970-11	CERAMIC CHIP 0.01UF	10.00% 25V
C1019	1-164-004-11	CERAMIC CHIP 0.1UF	10.00% 25V
C1020	1-126-933-11	ELECT 100UF	20.00% 16V
C1022	1-162-927-11	CERAMIC CHIP 100PF	5.00% 50V
C1023	1-164-004-11	CERAMIC CHIP 0.1UF	10.00% 25V
C1024	1-126-935-11	ELECT 470UF	20.00% 16V
C1025	1-126-935-11	ELECT 470UF	20.00% 16V
C1028	1-104-665-11	ELECT 100UF	20.00% 25V
C1029	1-136-495-11	FILM 0.068UF	5.00% 50V
C1030	1-136-495-11	FILM 0.068UF	5.00% 50V
C1031	1-164-004-11	CERAMIC CHIP 0.1UF	10.00% 25V
C1032	1-126-916-11	ELECT 1000UF	20.00% 6.3V
C1033	1-126-916-11	ELECT 1000UF	20.00% 6.3V
C1034	1-126-935-11	ELECT 470UF	20.00% 16V
C1035	1-104-652-11	ELECT 470UF	20.00% 10V
C1036	1-164-004-11	CERAMIC CHIP 0.1UF	10.00% 25V
C1037	1-126-939-11	ELECT 10000UF	20.00% 16V
C1038	1-104-665-11	ELECT 100UF	20.00% 25V
C1040	1-164-004-11	CERAMIC CHIP 0.1UF	10.00% 25V
C1041	1-136-495-11	FILM 0.068UF	5.00% 50V
C1042	1-126-916-11	ELECT 1000UF	20.00% 6.3V
C1043	1-164-156-11	CERAMIC CHIP 0.1UF	25V
C1044	1-164-156-11	CERAMIC CHIP 0.1UF	25V
C1045	1-104-665-11	ELECT 100UF	20.00% 25V
C1046	1-126-943-11	ELECT 2200UF	20.00% 25V
C1047	1-126-927-11	ELECT 2200UF	20.00% 10V
C1049	1-115-339-11	CERAMIC CHIP 0.1UF	10.00% 50V
C1050	1-164-004-11	CERAMIC CHIP 0.1UF	10.00% 25V
C1051	1-104-665-11	ELECT 100UF	20.00% 25V
C1052	1-126-935-11	ELECT 470UF	20.00% 16V
C1053	1-126-964-11	ELECT 10UF	20.00% 50V
C1054	1-126-964-11	ELECT 10UF	20.00% 50V
C1055	1-164-156-11	CERAMIC CHIP 0.1UF	25V
C1056	1-164-156-11	CERAMIC CHIP 0.1UF	25V
C1057	1-126-933-11	ELECT 100UF	20.00% 16V
C1058	1-126-933-11	ELECT 100UF	20.00% 16V
C1059	1-164-004-11	CERAMIC CHIP 0.1UF	10.00% 25V
C1060	1-104-665-11	ELECT 100UF	20.00% 25V
C1061	1-164-004-11	CERAMIC CHIP 0.1UF	10.00% 25V
C1062	1-126-935-11	ELECT 470UF	20.00% 16V
C1070	1-126-960-11	ELECT 1UF	20.00% 50V
C1104	1-126-933-11	ELECT 100UF	20.00% 16V
C1105	1-162-970-11	CERAMIC CHIP 0.01UF	10.00% 25V
C1201	1-115-340-11	CERAMIC CHIP 0.22UF	10.00% 25V
C1202	1-126-947-11	ELECT 47UF	20.00% 35V
C1203	1-136-175-00	FILM 0.68UF	5.00% 50V
C1204	1-164-004-11	CERAMIC CHIP 0.1UF	10.00% 25V
C1205	1-126-943-11	ELECT 2200UF	20.00% 25V
C1206	1-164-004-11	CERAMIC CHIP 0.1UF	10.00% 25V
C1207	1-164-004-11	CERAMIC CHIP 0.1UF	10.00% 25V
C1208	1-164-004-11	CERAMIC CHIP 0.1UF	10.00% 25V
C1209	1-163-135-00	CERAMIC CHIP 560PF	5.00% 50V
C1210	1-126-965-91	ELECT 22UF	20.00% 50V
C1211	1-115-339-11	CERAMIC CHIP 0.1UF	10.00% 50V
C1212	1-115-339-11	CERAMIC CHIP 0.1UF	10.00% 50V
C1213	1-126-965-91	ELECT 22UF	20.00% 50V
C1214	1-115-339-11	CERAMIC CHIP 0.1UF	10.00% 50V
C1215	1-162-966-11	CERAMIC CHIP 0.0022UF	10.00% 50V
C1216	1-162-927-11	CERAMIC CHIP 100PF	5.00% 50V
C1217	1-163-021-91	CERAMIC CHIP 0.01UF	10.00% 50V
C1218	1-164-505-11	CERAMIC CHIP 2.2UF	16V
C1219	1-164-004-11	CERAMIC CHIP 0.1UF	10.00% 25V
C1220	1-164-004-11	CERAMIC CHIP 0.1UF	10.00% 25V
C1222	1-130-777-00	MYLAR 0.1UF	5.00% 63V
C1223	1-126-952-11	ELECT 1000UF	20.00% 35V
C1224	1-111-216-91	ELECT 150UF	20.00% 63V
C1225	1-164-222-91	CERAMIC CHIP 0.22UF	25V
C1226	1-164-004-11	CERAMIC CHIP 0.1UF	10.00% 25V
C1227	1-126-952-11	ELECT 1000UF	20.00% 35V
C1228	1-126-961-11	ELECT 2.2UF	20.00% 50V
C1229	1-126-944-11	ELECT 3300UF	20.00% 25V
C1230	1-164-004-11	CERAMIC CHIP 0.1UF	10.00% 25V
C1231	1-162-966-11	CERAMIC CHIP 0.0022UF	10.00% 50V
C1232	1-126-947-11	ELECT 47UF	20.00% 35V
C1233	1-164-346-11	CERAMIC CHIP 1UF	16V
C1234	1-162-968-11	CERAMIC CHIP 0.0047UF	10.00% 50V
C1235	1-164-346-11	CERAMIC CHIP 1UF	16V
C1236	1-162-966-11	CERAMIC CHIP 0.0022UF	10.00% 50V
C1237	1-126-944-11	ELECT 3300UF	20.00% 25V
C1238	1-115-340-11	CERAMIC CHIP 0.22UF	10.00% 25V
C1239	1-163-087-00	CERAMIC CHIP 4PF	0.25PF 50V
C1242	1-163-087-00	CERAMIC CHIP 4PF	0.25PF 50V
C1245	1-162-923-11	CERAMIC CHIP 47PF	5.00% 50V
C1247	1-126-964-11	ELECT 10UF	20.00% 50V
C1249	1-126-964-11	ELECT 10UF	20.00% 50V
C1250	1-126-947-11	ELECT 47UF	20.00% 35V
C1251	1-163-107-00	CERAMIC CHIP 39PF	5.00% 50V
C1252	1-126-947-11	ELECT 47UF	20.00% 35V
C1254	1-165-319-11	CERAMIC CHIP 0.1UF	50V
C1255	1-164-004-11	CERAMIC CHIP 0.1UF	10.00% 25V
C1256	1-107-823-11	CERAMIC CHIP 0.47UF	10.00% 16V
C1257	1-164-004-11	CERAMIC CHIP 0.1UF	10.00% 25V
C1258	1-164-004-11	CERAMIC CHIP 0.1UF	10.00% 25V
C1264	1-162-966-11	CERAMIC CHIP 0.0022UF	10.00% 50V
C1265	1-162-966-11	CERAMIC CHIP 0.0022UF	10.00% 50V
C1270	1-162-923-11	CERAMIC CHIP 47PF	5.00% 50V
C1271	1-162-923-11	CERAMIC CHIP 47PF	5.00% 50V

REF.NO.	PART.NO	DESCRIPTION	REMARK
C1273	1-162-927-11	CERAMIC CHIP 100PF	5.00% 50V
C1274	1-163-241-11	CERAMIC CHIP 39PF	5.00% 50V
C1275	1-104-665-11	ELECT 100UF	20.00% 25V
C1276	1-163-021-91	CERAMIC CHIP 0.01UF	10.00% 50V
C1277	1-107-823-11	CERAMIC CHIP 0.47UF	10.00% 16V
C1278	1-107-823-11	CERAMIC CHIP 0.47UF	10.00% 16V
C1281	1-107-823-11	CERAMIC CHIP 0.47UF	10.00% 16V
C1282	1-126-964-11	ELECT 10UF	20.00% 50V
C1283	1-126-947-11	ELECT 47UF	20.00% 35V
C1284	1-164-004-11	CERAMIC CHIP 0.1UF	10.00% 25V
C1285	1-164-506-11	CERAMIC CHIP 4.7UF	16V
C1286	1-126-947-11	ELECT 47UF	20.00% 35V
C1287	1-126-947-11	ELECT 47UF	20.00% 35V
C1288	1-126-947-11	ELECT 47UF	20.00% 35V
C1289	1-126-947-11	ELECT 47UF	20.00% 35V
C1290	1-164-506-11	CERAMIC CHIP 4.7UF	16V
C1402	1-104-665-11	ELECT 100UF	20.00% 25V
C1403	1-164-222-91	CERAMIC CHIP 0.22UF	25V
C1404	1-164-222-91	CERAMIC CHIP 0.22UF	25V
C1405	1-104-665-11	ELECT 100UF	20.00% 25V
C1406	1-162-964-11	CERAMIC CHIP 0.001UF	10.00% 50V
C1407	1-164-222-91	CERAMIC CHIP 0.22UF	25V
C1408	1-107-823-11	CERAMIC CHIP 0.47UF	10.00% 16V
C1409	1-165-112-11	CERAMIC CHIP 0.33UF	16V
C1410	1-162-968-11	CERAMIC CHIP 0.0047UF	10.00% 50V
C1412	1-107-826-11	CERAMIC CHIP 0.1UF	10.00% 16V
C1413	1-107-826-11	CERAMIC CHIP 0.1UF	10.00% 16V
C1414	1-107-826-11	CERAMIC CHIP 0.1UF	10.00% 16V
C1416	1-104-665-11	ELECT 100UF	20.00% 25V
C1418	1-164-222-91	CERAMIC CHIP 0.22UF	25V
C1419	1-115-339-11	CERAMIC CHIP 0.1UF	10.00% 50V
C1420	1-165-112-11	CERAMIC CHIP 0.33UF	16V
C1424	1-126-963-11	ELECT 4.7UF	20.00% 50V
C1425	1-162-927-11	CERAMIC CHIP 100PF	5.00% 50V
C1426	1-115-340-11	CERAMIC CHIP 0.22UF	10.00% 25V
C1430	1-107-823-11	CERAMIC CHIP 0.47UF	10.00% 16V
C1431	1-107-826-11	CERAMIC CHIP 0.1UF	10.00% 16V
C1432	1-107-826-11	CERAMIC CHIP 0.1UF	10.00% 16V
C1434	1-107-826-11	CERAMIC CHIP 0.1UF	10.00% 16V
C1436	1-107-826-11	CERAMIC CHIP 0.1UF	10.00% 16V
C1437	1-107-826-11	CERAMIC CHIP 0.1UF	10.00% 16V
C1438	1-107-826-11	CERAMIC CHIP 0.1UF	10.00% 16V
C1439	1-137-581-11	FILM 0.1UF	5.00% 100V
C1440	1-164-004-11	CERAMIC CHIP 0.1UF	10.00% 25V
C1441	1-162-968-11	CERAMIC CHIP 0.0047UF	10.00% 50V
C1443	1-164-004-11	CERAMIC CHIP 0.1UF	10.00% 25V
C1444	1-126-947-11	ELECT 47UF	20.00% 35V
C1447	1-164-222-91	CERAMIC CHIP 0.22UF	25V
C1451	1-164-222-91	CERAMIC CHIP 0.22UF	25V
C1452	1-164-222-91	CERAMIC CHIP 0.22UF	25V
C1455	1-126-947-11	ELECT 47UF	20.00% 35V
C1457	1-104-665-11	ELECT 100UF	20.00% 25V
C1458	1-107-826-11	CERAMIC CHIP 0.1UF	10.00% 16V
C1459	1-126-963-11	ELECT 4.7UF	20.00% 50V
C1460	1-126-963-11	ELECT 4.7UF	20.00% 50V
C1461	1-162-966-11	CERAMIC CHIP 0.0022UF	10.00% 50V
C1462	1-126-947-11	ELECT 47UF	20.00% 35V
C1464	1-164-222-91	CERAMIC CHIP 0.22UF	25V
C1475	1-107-826-11	CERAMIC CHIP 0.1UF	10.00% 16V
C1476	1-126-933-11	ELECT 100UF	20.00% 16V
C1703	1-128-527-11	ELECT 330UF	20.00% 25V
C1704	1-126-968-11	ELECT 100UF	20.00% 50V
C1705	1-163-021-91	CERAMIC CHIP 0.01UF	10.00% 50V
C1706	1-137-401-11	MYLAR 0.22UF	5.00% 100V
C1707	1-102-228-00	CERAMIC 470PF	10.00% 500V
C1708	1-106-220-00	MYLAR 0.1UF	10.00% 100V
C1709	1-129-702-00	MYLAR 0.001UF	10.00% 400V
C1710	1-130-785-11	MYLAR 0.47UF	5.00% 100V
C1711	1-163-021-91	CERAMIC CHIP 0.01UF	10.00% 50V
C1712	1-126-968-11	ELECT 100UF	20.00% 50V
C1715	1-162-964-11	CERAMIC CHIP 0.001UF	10.00% 50V
C1716	1-104-665-11	ELECT 100UF	20.00% 25V
C1717	1-164-004-11	CERAMIC CHIP 0.1UF	10.00% 25V
C1720	1-126-964-11	ELECT 10UF	20.00% 50V
C1721	1-162-970-11	CERAMIC CHIP 0.01UF	10.00% 25V
C1800	1-162-968-11	CERAMIC CHIP 0.0047UF	10.00% 50V
C1801	1-162-927-11	CERAMIC CHIP 100PF	5.00% 50V
C1802	1-126-947-11	ELECT 47UF	20.00% 35V
C1803	1-164-222-91	CERAMIC CHIP 0.22UF	25V
C1804	1-163-809-11	CERAMIC CHIP 0.047UF	10.00% 25V
C1805	1-164-182-11	CERAMIC CHIP 0.0033UF	10.00% 50V
C1806	1-163-809-11	CERAMIC CHIP 0.047UF	10.00% 25V
C1807	1-164-004-11	CERAMIC CHIP 0.1UF	10.00% 25V
C1808	1-164-004-11	CERAMIC CHIP 0.1UF	10.00% 25V
C1813	1-102-106-00	CERAMIC 100PF	10.00% 50V
C1814	1-126-947-11	ELECT 47UF	20.00% 35V
C1816	1-164-004-11	CERAMIC CHIP 0.1UF	10.00% 25V
C1817	1-126-964-11	ELECT 10UF	20.00% 50V
C1820	1-136-177-00	FILM 1UF	5.00% 50V
C1821	1-126-965-91	ELECT 22UF	20.00% 50V
C1822	1-107-823-11	CERAMIC CHIP 0.47UF	10.00% 16V
C1823	1-136-177-00	FILM 1UF	5.00% 50V
C1824	1-164-222-91	CERAMIC CHIP 0.22UF	25V
C1825	1-164-222-91	CERAMIC CHIP 0.22UF	25V
C1826	1-126-947-11	ELECT 47UF	20.00% 35V
C1827	1-164-336-11	CERAMIC CHIP 0.33UF	25V
C1828	1-163-127-00	CERAMIC CHIP 270PF	5.00% 50V
C1829	1-164-336-11	CERAMIC CHIP 0.33UF	25V
C1830	1-115-339-11	CERAMIC CHIP 0.1UF	10.00% 50V
C1831	1-102-106-00	CERAMIC 100PF	10.00% 50V

REF.NO.	PART.NO	DESCRIPTION	REMARK
C1832	1-164-222-91	CERAMIC CHIP 0.22UF	25V
C1833	1-136-558-11	FILM 0.0039UF	5.00% 630V
C1837	1-136-153-00	FILM 0.01UF	5.00% 50V
C1838	1-163-989-11	CERAMIC CHIP 0.033UF	10.00% 25V
C1840	1-130-467-00	MYLAR 470PF	5.00% 50V
C1841	1-163-989-11	CERAMIC CHIP 0.033UF	10.00% 25V
C1842	1-162-968-11	CERAMIC CHIP 0.0047UF	10.00% 50V
C1843	1-137-499-11	FILM 0.015UF	5.00% 630V
C1847	1-126-947-11	ELECT 47UF	20.00% 35V
C1850	1-126-947-11	ELECT 47UF	20.00% 35V
C1851	1-136-165-00	FILM 0.1UF	5.00% 50V
C1852	1-137-194-81	FILM 0.47UF	5.00% 50V
C1853	1-164-222-91	CERAMIC CHIP 0.22UF	25V
C1854	1-126-947-11	ELECT 47UF	20.00% 35V
C1855	1-126-947-11	ELECT 47UF	20.00% 35V
C1856	1-164-222-91	CERAMIC CHIP 0.22UF	25V
C1858	1-162-923-11	CERAMIC CHIP 47PF	5.00% 50V
C1859	1-104-665-11	ELECT 100UF	20.00% 25V
C1861	1-126-941-11	ELECT 470UF	20.00% 25V
C1950	1-107-826-11	CERAMIC CHIP 0.1UF	10.00% 16V
C1951	1-136-165-00	FILM 0.1UF	5.00% 50V
C1952	1-126-947-11	ELECT 47UF	20.00% 35V
C1953	1-107-826-11	CERAMIC CHIP 0.1UF	10.00% 16V
C1970	1-126-964-11	ELECT 10UF	20.00% 50V
C1971	1-126-964-11	ELECT 10UF	20.00% 50V
C1972	1-162-970-11	CERAMIC CHIP 0.01UF	10.00% 25V
C1973	1-162-970-11	CERAMIC CHIP 0.01UF	10.00% 25V
C1974	1-126-964-11	ELECT 10UF	20.00% 50V
C1975	1-126-964-11	ELECT 10UF	20.00% 50V
C1980	1-164-156-11	CERAMIC CHIP 0.1UF	25V
C1981	1-107-826-11	CERAMIC CHIP 0.1UF	10.00% 16V
C4000	1-107-826-11	CERAMIC CHIP 0.1UF	10.00% 16V
C4001	1-107-826-11	CERAMIC CHIP 0.1UF	10.00% 16V
C4002	1-107-826-11	CERAMIC CHIP 0.1UF	10.00% 16V
C4003	1-162-974-11	CERAMIC CHIP 0.01UF	50V
C4004	1-107-826-11	CERAMIC CHIP 0.1UF	10.00% 16V
C4006	1-107-826-11	CERAMIC CHIP 0.1UF	10.00% 16V
C4007	1-107-826-11	CERAMIC CHIP 0.1UF	10.00% 16V
C4008	1-162-974-11	CERAMIC CHIP 0.01UF	50V
C4010	1-126-204-11	ELECT CHIP 47UF	20.00% 16V
C4013	1-164-156-11	CERAMIC CHIP 0.1UF	25V
C4015	1-126-968-11	ELECT 100UF	20.00% 50V
C4016	1-107-826-11	CERAMIC CHIP 0.1UF	10.00% 16V
C4017	1-127-715-91	CERAMIC CHIP 0.22UF	10% 16V
C4018	1-107-826-11	CERAMIC CHIP 0.1UF	10.00% 16V
C4019	1-164-160-11	CERAMIC CHIP 20PF	5.00% 50V
C4020	1-110-489-11	CAPACITOR 1F	5.5V
C4021	1-127-715-91	CERAMIC CHIP 0.22UF	10% 16V
C4022	1-107-826-11	CERAMIC CHIP 0.1UF	10.00% 16V
C4024	1-162-974-11	CERAMIC CHIP 0.01UF	50V
C4025	1-163-021-91	CERAMIC CHIP 0.01UF	10.00% 50V
C4026	1-163-021-91	CERAMIC CHIP 0.01UF	10.00% 50V
C4027	1-162-974-11	CERAMIC CHIP 0.01UF	50V
C4028	1-163-021-91	CERAMIC CHIP 0.01UF	10.00% 50V
C4029	1-126-964-11	ELECT 10UF	20.00% 50V
C4030	1-126-964-11	ELECT 10UF	20.00% 50V
C4038	1-126-964-11	ELECT 10UF	20.00% 50V
C4046	1-164-156-11	CERAMIC CHIP 0.1UF	25V
C4067	1-164-156-11	CERAMIC CHIP 0.1UF	25V
C4068	1-164-156-11	CERAMIC CHIP 0.1UF	25V
C4069	1-164-156-11	CERAMIC CHIP 0.1UF	25V
C4070	1-164-156-11	CERAMIC CHIP 0.1UF	25V
C4071	1-164-156-11	CERAMIC CHIP 0.1UF	25V
C4072	1-162-974-11	CERAMIC CHIP 0.01UF	50V
C4075	1-164-156-11	CERAMIC CHIP 0.1UF	25V
C4076	1-162-927-11	CERAMIC CHIP 100PF	5.00% 50V
C4077	1-162-927-11	CERAMIC CHIP 100PF	5.00% 50V
C4078	1-126-204-11	ELECT CHIP 47UF	20.00% 16V
C4080	1-126-206-11	ELECT CHIP 100UF	20.00% 6.3V
		< CERAMIC TRAP >	
CF1270	1-781-328-21	TRAP, CERAMIC	
		< CONNECTOR >	
CN1000	1-793-494-11	CONNECTOR, BOARD TO BOARD 40P	
CN1001	1-793-495-11	CONNECTOR, BOARD TO BOARD 50P	
CN1004	1-695-915-11	TAB (CONTACT)	
CN1201	*1-564-507-11	PLUG, CONNECTOR 4P	
CN1202	*1-564-507-11	PLUG, CONNECTOR 4P	
CN1251	1-695-915-11	TAB (CONTACT)	
CN1602	*1-564-508-11	PLUG, CONNECTOR 5P	
CN1603	*1-564-511-11	PLUG, CONNECTOR 8P	
CN1604	1-764-333-11	PIN, CONNECTOR(PCB)(V TYPE)10P	
CN1701	1-764-334-11	PIN, CONNECTOR(PCB)(V TYPE)11P	
CN1702	*1-564-507-11	PLUG, CONNECTOR 4P	
CN1706	*1-564-511-11	PLUG, CONNECTOR 8P	
CN1802	*1-564-511-11	PLUG, CONNECTOR 8P	
CN1803	*1-564-508-11	PLUG, CONNECTOR 5P	
CN1804	*1-564-511-11	PLUG, CONNECTOR 8P	
CN1805	1-764-333-11	PIN, CONNECTOR(PCB)(V TYPE)10P	
CN1807	*1-564-510-11	PLUG, CONNECTOR 7P	
CN1901	*1-564-506-11	PLUG, CONNECTOR 3P	
CN1902	*1-564-506-11	PLUG, CONNECTOR 3P	
CN1903	1-691-772-11	PLUG (MICRO CONNECTOR) 10P	
CN1999	*1-564-520-11	PLUG, CONNECTOR 5P	
CN2000	*1-564-516-11	PLUG, CONNECTOR 13P	
CN4000	*1-794-730-11	SOCKET, PC CONNECTOR (PC BOARD	
CN4002	1-793-493-11	CONNECTOR, BOARD TO BOARD 20P	
CN7109	1-793-495-11	CONNECTOR, BOARD TO BOARD 50P	

REF.NO.	PART.NO	DESCRIPTION	REMARK
	< DIODE >		
D1001	8-719-500-70	DIODE D5S4M	
D1002	8-719-500-70	DIODE D5S4M	
D1003	8-719-914-43	DIODE DAN202K	
D1004	8-719-914-43	DIODE DAN202K	
D1005	8-719-500-70	DIODE D5S4M	
D1006	8-719-500-70	DIODE D5S4M	
D1007	8-719-914-44	DIODE DAP202K	
D1008	8-719-914-44	DIODE DAP202K	
D1009	8-719-069-55	DIODE UDZSTE-175.6B	
D1010	8-719-914-43	DIODE DAN202K	
D1011	8-719-069-55	DIODE UDZSTE-175.6B	
D1012	8-719-083-60	DIODE UDZSTE-174.7B	
D1013	8-719-069-56	DIODE UDZSTE-176.2B	
D1014	8-719-069-56	DIODE UDZSTE-176.2B	
D1016	8-719-069-55	DIODE UDZSTE-175.6B	
D1017	8-719-063-73	DIODE D1NL20U-TR	
D1018	8-719-500-70	DIODE D5S4M	
D1022	8-719-063-73	DIODE D1NL20U-TR	
D1070	8-719-914-44	DIODE DAP202K	
D1201	8-719-914-43	DIODE DAN202K	
D1202	8-719-914-44	DIODE DAP202K	
D1203	8-719-914-44	DIODE DAP202K	
D1204	8-719-914-43	DIODE DAN202K	
D1205	8-719-914-43	DIODE DAN202K	
D1206	8-719-083-60	DIODE UDZSTE-174.7B	
D1207	8-719-421-57	DIODE MA73-TX	
D1209	8-719-069-54	DIODE UDZSTE-175.1B	
D1210	8-719-510-02	DIODE D1NS4	
D1211	8-719-510-02	DIODE D1NS4	
D1235	8-719-083-82	DIODE UDZS-TE17-12B	
D1236	8-719-083-82	DIODE UDZS-TE17-12B	
D1237	8-719-083-82	DIODE UDZS-TE17-12B	
D1238	8-719-083-82	DIODE UDZS-TE17-12B	
D1239	8-719-110-09	DIODE RD8.2ESB3	
D1403	8-719-914-43	DIODE DAN202K	
D1406	8-719-069-60	DIODE UDZSTE-179.1B	
D1701	8-719-110-49	DIODE RD18ESB2	
D1702	8-719-908-03	DIODE GP08D	
D1703	8-719-110-41	DIODE RD15ESB2	
D1704	8-719-081-97	DIODE MMDL914T1	
D1705	8-719-081-97	DIODE MMDL914T1	
D1801	8-719-914-43	DIODE DAN202K	
D1802	8-719-914-43	DIODE DAN202K	
D1803	8-719-914-43	DIODE DAN202K	
D1804	8-719-914-43	DIODE DAN202K	
D1805	8-719-105-82	DIODE RD5.1M-B2	
D1806	8-719-914-43	DIODE DAN202K	
D1807	8-719-914-43	DIODE DAN202K	
D1808	8-719-914-43	DIODE DAN202K	
D1809	8-719-987-87	DIODE ERA85-009	
D1810	8-719-991-33	DIODE 1SS133T-77	
D1811	8-719-914-43	DIODE DAN202K	
D1813	8-719-063-73	DIODE D1NL20U-TR	
D1814	8-719-914-43	DIODE DAN202K	
D1816	8-719-911-19	DIODE 1SS119-25	
D1901	1-216-864-11	SHORT CHIP 0	
D4000	8-719-982-24	DIODE MTZJ-33A	
D4001	8-719-812-43	DIODE TLG124A	
D4002	8-719-914-43	DIODE DAN202K	
	< FERRITE BEAD >		
FB1001	1-410-396-41	FERRITE 0.45UH	
FB1002	1-410-396-41	FERRITE 0.45UH	
FB1003	1-535-303-00	LEAD, JUMPER (5.0MM)	
FB1004	1-535-303-00	LEAD, JUMPER (5.0MM)	
FB1005	1-414-766-22	FERRITE 0UH	
FB1006	1-414-766-22	FERRITE 0UH	
FB1007	1-414-766-22	FERRITE 0UH	
FB1008	1-414-766-22	FERRITE 0UH	
FB1009	1-414-766-22	FERRITE 0UH	
FB1010	1-414-766-22	FERRITE 0UH	
FB1011	1-216-295-91	SHORT CHIP 0	
FB1012	1-216-295-91	SHORT CHIP 0	
FB1013	1-535-303-00	LEAD, JUMPER (5.0MM)	
FB1014	1-414-766-22	FERRITE 0UH	
FB1015	1-414-766-22	FERRITE 0UH	
FB1016	1-414-766-22	FERRITE 0UH	
FB1017	1-414-766-22	FERRITE 0UH	
FB1018	1-414-766-22	FERRITE 0UH	
FB1019	1-414-766-22	FERRITE 0UH	
FB1020	1-414-766-22	FERRITE 0UH	
FB1021	1-414-766-22	FERRITE 0UH	
FB1022	1-414-766-22	FERRITE 0UH	
FB1201	1-410-397-21	FERRITE 1.1UH	
FB1202	1-410-397-21	FERRITE 1.1UH	
FB1203	1-414-766-22	FERRITE 0UH	
FB1204	1-469-350-21	FERRITE 0UH	
FB1801	1-216-295-91	SHORT CHIP 0	
FB1802	1-216-295-91	SHORT CHIP 0	
FB1803	1-216-295-91	SHORT CHIP 0	
FB4000	1-216-797-11	METAL CHIP 10 5% 1/10W	
FB4008	1-216-793-11	METAL CHIP 4.7 5% 1/10W	
FB4011	1-469-869-21	FERRITE 0UH	
FB4013	1-469-869-21	FERRITE 0UH	
FB4014	1-469-869-21	FERRITE 0UH	
FB4015	1-469-869-21	FERRITE 0UH	
FB4018	1-469-869-21	FERRITE 0UH	

Note : The components identified by shading and marked ⚠ are critical for safety. Replace only with the part numbers specified in the parts list.

A

REF.NO.	PART.NO	DESCRIPTION	REMARK
FB4019	1-469-869-21	FERRITE 0UH	
FB4020	1-469-869-21	FERRITE 0UH	
FB4021	1-469-869-21	FERRITE 0UH	
	< FILTER >		
FL1010	1-233-736-21	FILTER, EMI	
FL1011	1-239-899-21	FERRITE 0UH	
FL1231	1-236-071-11	ENCAPSULATED COMPONENT	
FL1232	1-236-071-11	ENCAPSULATED COMPONENT	
FL1270	1-233-764-21	FILTER	
FL4000	1-239-899-21	FERRITE 0UH	
FL4001	1-239-899-21	FERRITE 0UH	
FL4002	1-239-899-21	FERRITE 0UH	
FL4003	1-239-899-21	FERRITE 0UH	
FL4004	1-239-899-21	FERRITE 0UH	
	< IC >		
IC1001	8-759-450-47	IC BA05T	
IC1002	8-759-640-19	IC PQ1CG2032FZ	
IC1003	8-759-640-19	IC PQ1CG2032FZ	
IC1005	8-759-450-47	IC BA05T	
IC1006	8-759-640-19	IC PQ1CG2032FZ	
IC1007	8-759-640-19	IC PQ1CG2032FZ	
IC1008	8-752-072-94	IC CXA1875AM-T4	
IC1009	8-759-701-59	IC NJM78M09FA	
IC1010	8-759-640-19	IC PQ1CG2032FZ	
IC1011	8-759-450-47	IC BA05T	
IC1012	8-759-445-59	IC BA033T	
IC1013	8-759-450-47	IC BA05T	
IC1102	8-759-712-65	IC PQ070XZ01ZP	
IC1201	8-759-544-25	IC TDA7482	
IC1202	8-759-333-24	IC LM1876TF	
IC1231	6-701-031-11	IC MSP3411G-QA-B11	
IC1270	8-759-701-36	IC NJM3403AM	
IC1402	8-752-100-26	IC CXA2150AQ-TL	
IC1701	8-759-696-71	IC STV9379A	
IC1801	8-759-665-11	IC LM393DT	
IC1802	8-759-998-98	IC LM358D	
IC1803	8-759-567-08	IC MB88141APF-ER	
IC1804	8-759-665-11	IC LM393DT	
IC1806	8-759-595-52	IC CXA8070AP	
IC1808	8-759-665-11	IC LM393DT	
IC1809	8-759-903-16	IC LM318P	
IC1811	8-759-803-42	IC LA6500-FA	
IC1812	8-759-394-35	IC BA12T	
IC1950	8-759-803-42	IC LA6500-FA	
IC4000	8-759-239-25	IC TC74HC4066AF	
IC4001	8-759-478-44	IC PCF8593/T118	
IC4004	8-759-544-26	IC LNBP11SP-TR	
IC4005	8-759-239-25	IC TC74HC4066AF	

REF.NO.	PART.NO	DESCRIPTION	REMARK
	< COIL >		
L1000	1-419-249-11	INDUCTOR 15UH	
L1001	1-412-525-31	INDUCTOR 10UH	
L1002	1-412-525-31	INDUCTOR 10UH	
L1003	1-414-934-21	INDUCTOR 10UH	
L1004	1-412-525-31	INDUCTOR 10UH	
L1005	1-412-525-31	INDUCTOR 10UH	
L1006	1-419-249-11	INDUCTOR 15UH	
L1007	1-419-249-11	INDUCTOR 15UH	
L1008	1-419-249-11	INDUCTOR 15UH	
L1009	1-419-249-11	INDUCTOR 15UH	
L1010	1-419-249-11	INDUCTOR 15UH	
L1011	1-419-249-11	INDUCTOR 15UH	
L1012	1-419-249-11	INDUCTOR 15UH	
L1013	1-412-525-31	INDUCTOR 10UH	
L1014	1-412-979-21	INDUCTOR 1UH	
L1015	1-412-979-21	INDUCTOR 1UH	
L1016	1-412-979-21	INDUCTOR 1UH	
L1017	1-419-249-11	INDUCTOR 15UH	
L1018	1-419-249-11	INDUCTOR 15UH	
L1019	1-412-525-31	INDUCTOR 10UH	
L1020	1-412-525-31	INDUCTOR 10UH	
L1201	1-416-857-11	INDUCTOR 65UH	
L1202	1-414-158-11	INDUCTOR 2.2UH	
L1203	1-414-158-11	INDUCTOR 2.2UH	
L1233	1-414-934-21	INDUCTOR 10UH	
L1270	1-412-006-31	INDUCTOR 10UH	
L1272	1-408-615-31	INDUCTOR 100UH	
L1401	1-414-934-21	INDUCTOR 10UH	
L1402	1-414-934-21	INDUCTOR 10UH	
L1403	1-414-934-21	INDUCTOR 10UH	
L1404	1-414-934-21	INDUCTOR 10UH	
L1405	1-414-934-21	INDUCTOR 10UH	
L1406	1-414-934-21	INDUCTOR 10UH	
L1701	1-412-524-11	INDUCTOR 8.2UH	
L1801	1-416-920-11	INDUCTOR 10MH	
L1802	1-406-989-21	INDUCTOR 10MH	
L1803	1-414-934-21	INDUCTOR 10UH	
L1804	1-412-525-31	INDUCTOR 10UH	
L4000	1-414-742-21	INDUCTOR 22UH	
L4001	1-412-006-31	INDUCTOR 10UH	
L4002	1-412-006-31	INDUCTOR 10UH	
	< PROTECTOR MODULE >		
PS1011 ⚠	1-801-549-21	PROTECTOR, MODULE 4.0A MP250	
PS1012 ⚠	1-801-549-21	PROTECTOR, MODULE 4.0A MP250	

REF.NO.	PART.NO	DESCRIPTION	REMARK
	< TRANSISTOR >		
Q1001	8-729-901-81	TRANSISTOR 2SC2412K-T-146-R	
Q1002	8-729-901-81	TRANSISTOR 2SC2412K-T-146-R	
Q1003	8-729-027-38	TRANSISTOR DTA144EKA-T146	
Q1004	8-729-901-81	TRANSISTOR 2SC2412K-T-146-R	
Q1005	8-729-026-49	TRANSISTOR 2SA1037AK-T146-R	
Q1006	8-729-901-81	TRANSISTOR 2SC2412K-T-146-R	
Q1007	8-729-901-81	TRANSISTOR 2SC2412K-T-146-R	
Q1008	8-729-026-49	TRANSISTOR 2SA1037AK-T146-R	
Q1009	8-729-028-28	TRANSISTOR 2SK2036(TE85L)	
Q1010	8-729-028-28	TRANSISTOR 2SK2036(TE85L)	
Q1011	8-729-901-81	TRANSISTOR 2SC2412K-T-146-R	
Q1012	8-729-901-81	TRANSISTOR 2SC2412K-T-146-R	
Q1070	8-729-120-28	TRANSISTOR 2SC1623-L5L6	
Q1071	8-729-026-49	TRANSISTOR 2SA1037AK-T146-R	
Q1072	1-801-806-11	TRANSISTOR DTC144EKA	
Q1201	8-729-026-49	TRANSISTOR 2SA1037AK-T146-R	
Q1202	8-729-901-81	TRANSISTOR 2SC2412K-T-146-R	
Q1203	8-729-901-81	TRANSISTOR 2SC2412K-T-146-R	
Q1204	8-729-901-81	TRANSISTOR 2SC2412K-T-146-R	
Q1205	8-729-901-81	TRANSISTOR 2SC2412K-T-146-R	
Q1207	1-801-806-11	TRANSISTOR DTC144EKA	
Q1270	8-729-901-81	TRANSISTOR 2SC2412K-T-146-R	
Q1271	8-729-901-81	TRANSISTOR 2SC2412K-T-146-R	
Q1272	8-729-901-81	TRANSISTOR 2SC2412K-T-146-R	
Q1402	8-729-901-81	TRANSISTOR 2SC2412K-T-146-R	
Q1406	8-729-026-49	TRANSISTOR 2SA1037AK-T146-R	
Q1407	8-729-026-49	TRANSISTOR 2SA1037AK-T146-R	
Q1410	8-729-026-49	TRANSISTOR 2SA1037AK-T146-R	
Q1411	8-729-026-49	TRANSISTOR 2SA1037AK-T146-R	
Q1412	8-729-026-49	TRANSISTOR 2SA1037AK-T146-R	
Q1413	8-729-026-49	TRANSISTOR 2SA1037AK-T146-R	
Q1422	8-729-026-49	TRANSISTOR 2SA1037AK-T146-R	
Q1423	8-729-901-81	TRANSISTOR 2SC2412K-T-146-R	
Q1701	8-729-039-68	TRANSISTOR IRF620	
Q1801	8-729-901-81	TRANSISTOR 2SC2412K-T-146-R	
Q1802	1-801-806-11	TRANSISTOR DTC144EKA	
Q1803	8-729-901-81	TRANSISTOR 2SC2412K-T-146-R	
Q1804	8-729-901-81	TRANSISTOR 2SC2412K-T-146-R	
Q1805	8-729-140-93	TRANSISTOR 2SB733-34	
Q1806	8-729-026-49	TRANSISTOR 2SA1037AK-T146-R	
Q1807	8-729-901-81	TRANSISTOR 2SC2412K-T-146-R	
Q1808	8-729-901-81	TRANSISTOR 2SC2412K-T-146-R	
Q1809	8-729-046-33	TRANSISTOR IRF720-LF49	
Q1811	8-729-026-49	TRANSISTOR 2SA1037AK-T146-R	
Q1812	8-729-045-04	TRANSISTOR 2SC5511	
Q1813	8-729-017-05	TRANSISTOR 2SA1837	
Q1970	8-729-901-81	TRANSISTOR 2SC2412K-T-146-R	
Q1971	8-729-901-81	TRANSISTOR 2SC2412K-T-146-R	
Q1972	8-729-901-81	TRANSISTOR 2SC2412K-T-146-R	
Q1973	8-729-901-81	TRANSISTOR 2SC2412K-T-146-R	
Q4000	1-801-806-11	TRANSISTOR DTC144EKA	
Q4001	1-801-806-11	TRANSISTOR DTC144EKA	
Q4002	1-801-806-11	TRANSISTOR DTC144EKA	
Q4003	8-729-028-28	TRANSISTOR 2SK2036(TE85L)	
Q4004	8-729-028-28	TRANSISTOR 2SK2036(TE85L)	
Q4005	8-729-028-28	TRANSISTOR 2SK2036(TE85L)	
Q4006	8-729-028-28	TRANSISTOR 2SK2036(TE85L)	
Q4017	1-801-806-11	TRANSISTOR DTC144EKA	
Q4018	1-801-806-11	TRANSISTOR DTC144EKA	
Q4124	1-801-806-11	TRANSISTOR DTC144EKA	
	< RESISTOR >		
JR1006	1-216-864-11	SHORT CHIP 0	
JR1007	1-216-864-11	SHORT CHIP 0	
JR1238	1-216-295-91	SHORT CHIP 0	
R1001	1-216-829-11	METAL CHIP 4.7K 5%	1/10W
R1002	1-216-829-11	METAL CHIP 4.7K 5%	1/10W
R1003	1-218-847-11	METAL CHIP 1K 0.5%	1/10W
R1004	1-218-839-11	METAL CHIP 470 0.5%	1/10W
R1005	1-216-652-11	METAL CHIP 1.1K 0.5%	1/10W
R1006	1-218-851-11	METAL CHIP 1.5K 0.5%	1/10W
R1007	1-216-833-11	METAL CHIP 10K 5%	1/10W
R1009	1-216-833-11	METAL CHIP 10K 5%	1/10W
R1011	1-216-833-11	METAL CHIP 10K 5%	1/10W
R1012	1-216-833-11	METAL CHIP 10K 5%	1/10W
R1013	1-216-824-11	METAL CHIP 1.8K 5%	1/10W
R1014	1-216-295-91	SHORT CHIP 0	
R1015	1-216-821-11	METAL CHIP 1K 5%	1/10W
R1016	1-216-809-11	METAL CHIP 100 5%	1/10W
R1018	1-216-817-11	METAL CHIP 470 5%	1/10W
R1019	1-216-817-11	METAL CHIP 470 5%	1/10W
R1020	1-216-817-11	METAL CHIP 470 5%	1/10W
R1021	1-216-841-11	METAL CHIP 47K 5%	1/10W
R1022	1-216-834-11	METAL CHIP 12K 5%	1/10W
R1023	1-218-867-11	METAL CHIP 6.8K 0.5%	1/10W
R1024	1-216-809-11	METAL CHIP 100 5%	1/10W
R1025	1-216-817-11	METAL CHIP 470 5%	1/10W
R1026	1-216-817-11	METAL CHIP 470 5%	1/10W
R1027	1-216-829-11	METAL CHIP 4.7K 5%	1/10W
R1028	1-216-797-11	METAL CHIP 10 5%	1/10W
R1029	1-216-817-11	METAL CHIP 470 5%	1/10W
R1030	1-216-818-11	METAL CHIP 560 5%	1/10W
R1031	1-216-833-11	METAL CHIP 10K 5%	1/10W
R1033	1-216-829-11	METAL CHIP 4.7K 5%	1/10W
R1034	1-216-829-11	METAL CHIP 4.7K 5%	1/10W
R1035	1-216-650-11	METAL CHIP 910 0.5%	1/10W
R1036	1-218-847-11	METAL CHIP 1K 0.5%	1/10W

REF.NO.	PART.NO	DESCRIPTION			REMARK
R1037	1-216-652-11	METAL CHIP	1.1K	0.5%	1/10W
R1038	1-218-851-11	METAL CHIP	1.5K	0.5%	1/10W
R1039	1-216-809-11	METAL CHIP	100	5%	1/10W
R1040	1-216-809-11	METAL CHIP	100	5%	1/10W
R1041	1-216-833-11	METAL CHIP	10K	5%	1/10W
R1042	1-216-809-11	METAL CHIP	100	5%	1/10W
R1043	1-216-809-11	METAL CHIP	100	5%	1/10W
R1044	1-216-809-11	METAL CHIP	100	5%	1/10W
R1045	1-216-809-11	METAL CHIP	100	5%	1/10W
R1046	1-216-809-11	METAL CHIP	100	5%	1/10W
R1047	1-216-864-11	SHORT CHIP	0		
R1048	1-216-295-91	SHORT CHIP	0		
R1049	1-216-809-11	METAL CHIP	100	5%	1/10W
R1050	1-216-809-11	METAL CHIP	100	5%	1/10W
R1051	1-218-837-11	METAL CHIP	390	0.5%	1/10W
R1052	1-218-847-11	METAL CHIP	1K	0.5%	1/10W
R1053	1-218-837-11	METAL CHIP	390	0.5%	1/10W
R1055	1-216-833-11	METAL CHIP	10K	5%	1/10W
R1057	1-218-867-11	METAL CHIP	6.8K	0.5%	1/10W
R1058	1-216-835-11	METAL CHIP	15K	5%	1/10W
R1059	1-216-829-11	METAL CHIP	4.7K	5%	1/10W
R1060	1-216-821-11	METAL CHIP	1K	5%	1/10W
R1061	1-216-864-11	SHORT CHIP	0		
R1063	1-216-864-11	SHORT CHIP	0		
R1064	1-216-840-11	METAL CHIP	39K	5%	1/10W
R1065	1-216-841-11	METAL CHIP	47K	5%	1/10W
R1068	1-216-829-11	METAL CHIP	4.7K	5%	1/10W
R1069	1-216-829-11	METAL CHIP	4.7K	5%	1/10W
R1070	1-216-833-11	METAL CHIP	10K	5%	1/10W
R1071	1-216-833-11	METAL CHIP	10K	5%	1/10W
R1072	1-216-821-11	METAL CHIP	1K	5%	1/10W
R1073	1-216-833-11	METAL CHIP	10K	5%	1/10W
R1074	1-216-864-11	SHORT CHIP	0		
R1075	1-216-821-11	METAL CHIP	1K	5%	1/10W
R1076	1-216-829-11	METAL CHIP	4.7K	5%	1/10W
R1078	1-216-864-11	SHORT CHIP	0		
R1079	1-216-841-11	METAL CHIP	47K	5%	1/10W
R1081	1-216-397-11	METAL OXIDE	4.7	5%	3W
R1082	1-216-864-11	SHORT CHIP	0		
R1084	1-216-295-91	SHORT CHIP	0		
R1085	1-216-295-91	SHORT CHIP	0		
R1087	1-216-295-91	SHORT CHIP	0		
R1089	1-216-864-11	SHORT CHIP	0		
R1093	1-216-295-91	SHORT CHIP	0		
R1094	1-216-809-11	METAL CHIP	100	5%	1/10W
R1095	1-218-875-11	METAL CHIP	15K	0.5%	1/10W
R1096	1-216-864-11	SHORT CHIP	0		
R1097	1-216-864-11	SHORT CHIP	0		
R1104	1-216-864-11	SHORT CHIP	0		
R1108	1-216-864-11	SHORT CHIP	0		
R1109	1-216-864-11	SHORT CHIP	0		
R1117	1-216-864-11	SHORT CHIP	0		
R1119	1-216-864-11	SHORT CHIP	0		
R1120	1-216-864-11	SHORT CHIP	0		
R1121	1-216-864-11	SHORT CHIP	0		
R1122	1-216-864-11	SHORT CHIP	0		
R1125	1-216-864-11	SHORT CHIP	0		
R1126	1-216-864-11	SHORT CHIP	0		
R1128	1-216-864-11	SHORT CHIP	0		
R1129	1-216-864-11	SHORT CHIP	0		
R1131	1-216-833-11	METAL CHIP	10K	5%	1/10W
R1132	1-216-809-11	METAL CHIP	100	5%	1/10W
R1133	1-216-809-11	METAL CHIP	100	5%	1/10W
R1135	1-216-864-11	SHORT CHIP	0		
R1137	1-216-864-11	SHORT CHIP	0		
R1144	1-216-829-11	METAL CHIP	4.7K	5%	1/10W
R1145	1-216-650-11	METAL CHIP	910	0.5%	1/10W
R1146	1-216-661-11	METAL CHIP	2.7K	0.5%	1/10W
R1147	1-216-824-11	METAL CHIP	1.8K	5%	1/10W
R1148	1-216-824-11	METAL CHIP	1.8K	5%	1/10W
R1150	1-216-864-11	SHORT CHIP	0		
R1151	1-216-864-11	SHORT CHIP	0		
R1152	1-216-864-11	SHORT CHIP	0		
R1160	1-216-829-11	METAL CHIP	4.7K	5%	1/10W
R1198	1-216-864-11	SHORT CHIP	0		
R1199	1-216-864-11	SHORT CHIP	0		
R1201	1-216-817-11	METAL CHIP	470	5%	1/10W
R1202	1-249-422-11	CARBON	2.7K	5%	1/4W
R1203	1-249-422-11	CARBON	2.7K	5%	1/4W
R1204	1-249-422-11	CARBON	2.7K	5%	1/4W
R1205	1-216-809-11	METAL CHIP	100	5%	1/10W
R1207	1-216-357-00	METAL OXIDE	4.7	5%	1W
R1208	1-216-825-11	METAL CHIP	2.2K	5%	1/10W
R1209	1-216-825-11	METAL CHIP	2.2K	5%	1/10W
R1210	1-216-841-11	METAL CHIP	47K	5%	1/10W
R1211	1-216-828-11	METAL CHIP	3.9K	5%	1/10W
R1212	1-216-828-11	METAL CHIP	3.9K	5%	1/10W
R1213	1-216-357-00	METAL OXIDE	4.7	5%	1W
R1214	1-216-296-11	SHORT CHIP	0		
R1215	1-216-631-11	METAL CHIP	150	0.5%	1/10W
R1216	1-216-837-11	METAL CHIP	22K	5%	1/10W
R1217	1-216-819-11	METAL CHIP	680	5%	1/10W
R1218	1-216-837-11	METAL CHIP	22K	5%	1/10W
R1219	1-216-819-11	METAL CHIP	680	5%	1/10W
R1220	1-216-833-11	METAL CHIP	10K	5%	1/10W
R1221	1-216-296-11	SHORT CHIP	0		
R1222	1-216-841-11	METAL CHIP	47K	5%	1/10W
R1223	1-216-841-11	METAL CHIP	47K	5%	1/10W
R1224	1-216-841-11	METAL CHIP	47K	5%	1/10W
R1225	1-216-838-11	METAL CHIP	27K	5%	1/10W

REF.NO.	PART.NO	DESCRIPTION			REMARK
R1227	1-216-832-11	METAL CHIP	8.2K	5%	1/10W
R1229	1-216-829-11	METAL CHIP	4.7K	5%	1/10W
R1230	1-216-841-11	METAL CHIP	47K	5%	1/10W
R1232	1-216-833-11	METAL CHIP	10K	5%	1/10W
R1234	1-216-837-11	METAL CHIP	22K	5%	1/10W
R1237	1-249-401-11	CARBON	47	5%	1/4W
R1238	1-216-295-91	SHORT CHIP	0		
R1239	1-216-829-11	METAL CHIP	4.7K	5%	1/10W
R1240	1-216-829-11	METAL CHIP	4.7K	5%	1/10W
R1241	1-216-829-11	METAL CHIP	4.7K	5%	1/10W
R1242	1-216-841-11	METAL CHIP	47K	5%	1/10W
R1244	1-216-841-11	METAL CHIP	47K	5%	1/10W
R1246	1-216-864-11	SHORT CHIP	0		
R1248	1-216-864-11	SHORT CHIP	0		
R1256	1-216-829-11	METAL CHIP	4.7K	5%	1/10W
R1260	1-216-809-11	METAL CHIP	100	5%	1/10W
R1261	1-216-809-11	METAL CHIP	100	5%	1/10W
R1270	1-216-815-11	METAL CHIP	330	5%	1/10W
R1272	1-216-821-11	METAL CHIP	1K	5%	1/10W
R1273	1-218-867-11	METAL CHIP	6.8K	0.5%	1/10W
R1274	1-218-867-11	METAL CHIP	6.8K	0.5%	1/10W
R1275	1-216-821-11	METAL CHIP	1K	5%	1/10W
R1276	1-216-821-11	METAL CHIP	1K	5%	1/10W
R1277	1-216-841-11	METAL CHIP	47K	5%	1/10W
R1278	1-216-841-11	METAL CHIP	47K	5%	1/10W
R1279	1-216-841-11	METAL CHIP	47K	5%	1/10W
R1280	1-218-899-11	METAL CHIP	150K	0.5%	1/16W
R1281	1-216-841-11	METAL CHIP	47K	5%	1/10W
R1283	1-216-841-11	METAL CHIP	47K	5%	1/10W
R1284	1-216-841-11	METAL CHIP	47K	5%	1/10W
R1286	1-216-841-11	METAL CHIP	47K	5%	1/10W
R1287	1-216-841-11	METAL CHIP	47K	5%	1/10W
R1288	1-216-818-11	METAL CHIP	560	5%	1/10W
R1289	1-218-867-11	METAL CHIP	6.8K	0.5%	1/10W
R1290	1-216-828-11	METAL CHIP	3.9K	5%	1/10W
R1293	1-216-864-11	SHORT CHIP	0		
R1297	1-216-864-11	SHORT CHIP	0		
R1406	1-216-833-11	METAL CHIP	10K	5%	1/10W
R1411	1-216-809-11	METAL CHIP	100	5%	1/10W
R1412	1-216-809-11	METAL CHIP	100	5%	1/10W
R1413	1-216-809-11	METAL CHIP	100	5%	1/10W
R1414	1-218-871-11	METAL CHIP	10K	0.5%	1/10W
R1416	1-216-835-11	METAL CHIP	15K	5%	1/10W
R1417	1-216-809-11	METAL CHIP	100	5%	1/10W
R1422	1-216-817-11	METAL CHIP	470	5%	1/10W
R1427	1-216-864-11	SHORT CHIP	0		
R1428	1-218-863-11	METAL CHIP	4.7K	0.5%	1/10W
R1434	1-216-825-11	METAL CHIP	2.2K	5%	1/10W
R1435	1-216-825-11	METAL CHIP	2.2K	5%	1/10W
R1437	1-216-809-11	METAL CHIP	100	5%	1/10W

REF.NO.	PART.NO	DESCRIPTION			REMARK
R1441	1-216-295-91	SHORT CHIP	0		
R1443	1-216-809-11	METAL CHIP	100	5%	1/10W
R1444	1-216-863-11	METAL CHIP	3.3M	5%	1/10W
R1445	1-216-826-11	METAL CHIP	2.7K	5%	1/10W
R1447	1-216-827-11	METAL CHIP	3.3K	5%	1/10W
R1448	1-216-809-11	METAL CHIP	100	5%	1/10W
R1450	1-216-809-11	METAL CHIP	100	5%	1/10W
R1451	1-216-809-11	METAL CHIP	100	5%	1/10W
R1452	1-216-295-91	SHORT CHIP	0		
R1453	1-216-295-91	SHORT CHIP	0		
R1454	1-216-809-11	METAL CHIP	100	5%	1/10W
R1456	1-216-825-11	METAL CHIP	2.2K	5%	1/10W
R1457	1-216-809-11	METAL CHIP	100	5%	1/10W
R1459	1-216-809-11	METAL CHIP	100	5%	1/10W
R1460	1-216-809-11	METAL CHIP	100	5%	1/10W
R1461	1-216-809-11	METAL CHIP	100	5%	1/10W
R1462	1-216-809-11	METAL CHIP	100	5%	1/10W
R1463	1-216-809-11	METAL CHIP	100	5%	1/10W
R1464	1-216-829-11	METAL CHIP	4.7K	5%	1/10W
R1466	1-216-833-11	METAL CHIP	10K	5%	1/10W
R1468	1-216-864-11	SHORT CHIP	0		
R1469	1-216-809-11	METAL CHIP	100	5%	1/10W
R1470	1-216-809-11	METAL CHIP	100	5%	1/10W
R1471	1-216-821-11	METAL CHIP	1K	5%	1/10W
R1472	1-218-271-11	METAL CHIP	2K	5%	1/10W
R1473	1-216-809-11	METAL CHIP	100	5%	1/10W
R1479	1-216-864-11	SHORT CHIP	0		
R1483	1-216-809-11	METAL CHIP	100	5%	1/10W
R1487	1-216-821-11	METAL CHIP	1K	5%	1/10W
R1488	1-216-821-11	METAL CHIP	1K	5%	1/10W
R1489	1-216-833-11	METAL CHIP	10K	5%	1/10W
R1490	1-216-833-11	METAL CHIP	10K	5%	1/10W
R1491	1-216-821-11	METAL CHIP	1K	5%	1/10W
R1492	1-216-833-11	METAL CHIP	10K	5%	1/10W
R1493	1-216-845-11	METAL CHIP	100K	5%	1/10W
R1494	1-216-821-11	METAL CHIP	1K	5%	1/10W
R1495	1-218-889-11	METAL CHIP	56K	0.5%	1/10W
R1496	1-216-821-11	METAL CHIP	1K	5%	1/10W
R1497	1-216-821-11	METAL CHIP	1K	5%	1/10W
R1499	1-216-818-11	METAL CHIP	560	5%	1/10W
R1500	1-216-864-11	SHORT CHIP	0		
R1501	1-216-829-11	METAL CHIP	4.7K	5%	1/10W
R1505	1-216-864-11	SHORT CHIP	0		
R1506	1-216-864-11	SHORT CHIP	0		
R1507	1-216-864-11	SHORT CHIP	0		
R1508	1-216-825-11	METAL CHIP	2.2K	5%	1/10W
R1509	1-216-825-11	METAL CHIP	2.2K	5%	1/10W
R1510	1-216-825-11	METAL CHIP	2.2K	5%	1/10W
R1519	1-216-864-11	SHORT CHIP	0		
R1520	1-216-864-11	SHORT CHIP	0		

REF.NO.	PART.NO	DESCRIPTION			REMARK
R1521	1-216-864-11	SHORT CHIP	0		
R1522	1-216-864-11	SHORT CHIP	0		
R1701	1-208-800-11	METAL CHIP	5.6K	0.5%	1/10W
R1702	1-208-800-11	METAL CHIP	5.6K	0.5%	1/10W
R1703	1-208-794-11	METAL CHIP	3.3K	0.5%	1/10W
R1704	1-208-794-11	METAL CHIP	3.3K	0.5%	1/10W
R1705	1-249-383-11	CARBON	1.5	5%	1/4W
R1706	1-249-389-11	CARBON	4.7	5%	1/4W
R1707	1-247-791-91	CARBON	22	5%	1/4W
R1708	1-215-913-11	METAL OXIDE	220	5%	3W
R1709	1-214-798-21	METAL	1.8	1%	1/2W
R1710	1-216-827-11	METAL CHIP	3.3K	5%	1/10W
R1711	1-214-798-21	METAL	1.8	1%	1/2W
R1714	1-216-826-11	METAL CHIP	2.7K	5%	1/10W
R1721	1-216-843-11	METAL CHIP	68K	5%	1/10W
R1722	1-216-832-11	METAL CHIP	8.2K	5%	1/10W
R1723	1-216-838-11	METAL CHIP	27K	5%	1/10W
R1801	1-216-841-11	METAL CHIP	47K	5%	1/10W
R1802	1-216-825-11	METAL CHIP	2.2K	5%	1/10W
R1803	1-216-845-11	METAL CHIP	100K	5%	1/10W
R1804	1-216-833-11	METAL CHIP	10K	5%	1/10W
R1805	1-216-845-11	METAL CHIP	100K	5%	1/10W
R1806	1-216-817-11	METAL CHIP	470	5%	1/10W
R1807	1-208-806-11	METAL CHIP	10K	0.5%	1/10W
R1809	1-216-833-11	METAL CHIP	10K	5%	1/10W
R1811	1-216-825-11	METAL CHIP	2.2K	5%	1/10W
R1812	1-218-875-11	METAL CHIP	15K	0.5%	1/10W
R1813	1-218-875-11	METAL CHIP	15K	0.5%	1/10W
R1814	1-218-867-11	METAL CHIP	6.8K	0.5%	1/10W
R1815	1-216-833-11	METAL CHIP	10K	5%	1/10W
R1816	1-216-809-11	METAL CHIP	100	5%	1/10W
R1817	1-216-809-11	METAL CHIP	100	5%	1/10W
R1819	1-216-809-11	METAL CHIP	100	5%	1/10W
R1820	1-216-809-11	METAL CHIP	100	5%	1/10W
R1821	1-216-809-11	METAL CHIP	100	5%	1/10W
R1823	1-216-809-11	METAL CHIP	100	5%	1/10W
R1825	1-216-809-11	METAL CHIP	100	5%	1/10W
R1826	1-218-895-11	METAL CHIP	100K	0.5%	1/10W
R1828	1-216-864-11	SHORT CHIP	0		
R1829	1-216-821-11	METAL CHIP	1K	5%	1/10W
R1830	1-216-295-91	SHORT CHIP	0		
R1831	1-216-842-11	METAL CHIP	56K	5%	1/10W
R1834	1-216-841-11	METAL CHIP	47K	5%	1/10W
R1835	1-216-813-11	METAL CHIP	220	5%	1/10W
R1838	1-216-827-11	METAL CHIP	3.3K	5%	1/10W
R1839	1-218-875-11	METAL CHIP	15K	0.5%	1/10W
R1840	1-216-821-11	METAL CHIP	1K	5%	1/10W
R1841	1-216-805-11	METAL CHIP	47	5%	1/10W
R1842	1-216-805-11	METAL CHIP	47	5%	1/10W
R1843	1-216-805-11	METAL CHIP	47	5%	1/10W

REF.NO.	PART.NO	DESCRIPTION			REMARK
R1844	1-216-833-11	METAL CHIP	10K	5%	1/10W
R1846	1-216-825-11	METAL CHIP	2.2K	5%	1/10W
R1847	1-216-809-11	METAL CHIP	100	5%	1/10W
R1848	1-216-809-11	METAL CHIP	100	5%	1/10W
R1852	1-215-906-11	METAL OXIDE	15	5%	3W
R1853	1-216-821-11	METAL CHIP	1K	5%	1/10W
R1854	1-216-853-11	METAL CHIP	470K	5%	1/10W
R1855	1-208-794-11	METAL CHIP	3.3K	0.5%	1/10W
R1856	1-216-849-11	METAL CHIP	220K	5%	1/10W
R1861	1-208-798-11	METAL CHIP	4.7K	0.5%	1/10W
R1862	1-216-827-11	METAL CHIP	3.3K	5%	1/10W
R1863	1-216-825-11	METAL CHIP	2.2K	5%	1/10W
R1864	1-216-827-11	METAL CHIP	3.3K	5%	1/10W
R1865	1-216-825-11	METAL CHIP	2.2K	5%	1/10W
R1867	1-216-845-11	METAL CHIP	100K	5%	1/10W
R1868	1-216-845-11	METAL CHIP	100K	5%	1/10W
R1869	1-260-321-71	CARBON	270	5%	1/2W
R1870	1-216-822-11	METAL CHIP	1.2K	5%	1/10W
R1871	1-216-809-11	METAL CHIP	100	5%	1/10W
R1872	1-216-809-11	METAL CHIP	100	5%	1/10W
R1874	1-216-821-11	METAL CHIP	1K	5%	1/10W
R1876	1-218-873-11	METAL CHIP	12K	0.5%	1/10W
R1879	1-208-804-11	METAL CHIP	8.2K	0.5%	1/10W
R1880	1-216-847-11	METAL CHIP	150K	5%	1/10W
R1882	1-208-790-11	METAL CHIP	2.2K	0.5%	1/10W
R1883	1-216-821-11	METAL CHIP	1K	5%	1/10W
R1886	1-216-837-11	METAL CHIP	22K	5%	1/10W
R1888	1-216-850-11	METAL CHIP	270K	5%	1/10W
R1890	1-216-825-11	METAL CHIP	2.2K	5%	1/10W
R1891	1-216-641-11	METAL CHIP	390	0.5%	1/10W
R1892	1-208-790-11	METAL CHIP	2.2K	0.5%	1/10W
R1893	1-218-871-11	METAL CHIP	10K	0.5%	1/10W
R1894	1-216-829-11	METAL CHIP	4.7K	5%	1/10W
R1897	1-216-845-11	METAL CHIP	100K	5%	1/10W
R1898	1-208-806-11	METAL CHIP	10K	0.5%	1/10W
R1899	1-216-821-11	METAL CHIP	1K	5%	1/10W
R1900	1-216-864-11	SHORT CHIP	0		
R1904	1-218-859-11	METAL CHIP	3.3K	0.5%	1/10W
R1905	1-218-756-11	METAL CHIP	150K	0.5%	1/10W
R1906	1-208-782-11	METAL CHIP	1K	0.5%	1/10W
R1908	1-216-825-11	METAL CHIP	2.2K	5%	1/10W
R1909	1-208-798-11	METAL CHIP	4.7K	0.5%	1/10W
R1910	1-216-833-11	METAL CHIP	10K	5%	1/10W
R1911	1-218-760-11	METAL CHIP	220K	0.5%	1/10W
R1912	1-218-867-11	METAL CHIP	6.8K	0.5%	1/10W
R1914	1-216-809-11	METAL CHIP	100	5%	1/10W
R1915	1-216-827-11	METAL CHIP	3.3K	5%	1/10W
R1916	1-216-353-00	METAL OXIDE	2.2	5%	1W
R1918	1-216-825-11	METAL CHIP	2.2K	5%	1/10W
R1919	1-216-825-11	METAL CHIP	2.2K	5%	1/10W

REF.NO.	PART.NO	DESCRIPTION			REMARK
R1922	1-218-871-11	METAL CHIP	10K	0.5%	1/10W
R1924	1-212-849-00	FUSIBLE	4.7	5%	1/4W
R1925	1-212-849-00	FUSIBLE	4.7	5%	1/4W
R1928	1-215-886-11	METAL OXIDE	100	5%	2W
R1929	1-216-393-00	METAL OXIDE	2.2	5%	3W
R1930	1-216-825-11	METAL CHIP	2.2K	5%	1/10W
R1931	1-216-864-11	SHORT CHIP	0		
R1933	1-216-837-11	METAL CHIP	22K	5%	1/10W
R1934	1-216-821-11	METAL CHIP	1K	5%	1/10W
R1935	1-216-833-11	METAL CHIP	10K	5%	1/10W
R1936	1-216-829-11	METAL CHIP	4.7K	5%	1/10W
R1950	1-218-888-11	METAL CHIP	51K	0.5%	1/10W
R1951	1-218-853-11	METAL CHIP	1.8K	0.5%	1/10W
R1952	1-218-867-11	METAL CHIP	6.8K	0.5%	1/10W
R1953	1-215-867-00	METAL OXIDE	470	5%	1W
R1954	1-249-395-11	CARBON	15	5%	1/4W
R1955	1-216-818-11	METAL CHIP	560	5%	1/10W
R1956	1-249-383-11	CARBON	1.5	5%	1/4W
R1957	1-249-381-11	CARBON	1	5%	1/4W
R1966	1-216-855-11	METAL CHIP	680K	5%	1/10W
R1967	1-216-844-11	METAL CHIP	82K	5%	1/10W
R1968	1-218-887-11	METAL CHIP	47K	0.5%	1/10W
R1969	1-218-875-11	METAL CHIP	15K	0.5%	1/10W
R1970	1-216-829-11	METAL CHIP	4.7K	5%	1/10W
R1971	1-216-825-11	METAL CHIP	2.2K	5%	1/10W
R1972	1-216-829-11	METAL CHIP	4.7K	5%	1/10W
R1973	1-216-825-11	METAL CHIP	2.2K	5%	1/10W
R1974	1-216-825-11	METAL CHIP	2.2K	5%	1/10W
R1975	1-216-833-11	METAL CHIP	10K	5%	1/10W
R1976	1-216-846-11	METAL CHIP	120K	5%	1/10W
R1977	1-216-839-11	METAL CHIP	33K	5%	1/10W
R1978	1-216-833-11	METAL CHIP	10K	5%	1/10W
R1979	1-216-833-11	METAL CHIP	10K	5%	1/10W
R1982	1-216-837-11	METAL CHIP	22K	5%	1/10W
R1983	1-216-849-11	METAL CHIP	220K	5%	1/10W
R1984	1-216-833-11	METAL CHIP	10K	5%	1/10W
R1985	1-216-841-11	METAL CHIP	47K	5%	1/10W
R1986	1-216-843-11	METAL CHIP	68K	5%	1/10W
R1987	1-218-871-11	METAL CHIP	10K	0.5%	1/10W
R1988	1-218-889-11	METAL CHIP	58K	0.5%	1/10W
R1989	1-218-871-11	METAL CHIP	10K	0.5%	1/10W
R1990	1-216-839-11	METAL CHIP	33K	5%	1/10W
R1995	1-216-843-11	METAL CHIP	68K	5%	1/10W
R4000	1-216-864-11	SHORT CHIP	0		
R4002	1-412-006-31	INDUCTOR	10UH		
R4003	1-469-564-11	FERRITE	0UH		
R4004	1-469-564-11	FERRITE	0UH		
R4005	1-469-564-11	FERRITE	0UH		
R4006	1-469-564-11	FERRITE	0UH		
R4007	1-469-564-11	FERRITE	0UH		
R4008	1-469-564-11	FERRITE	0UH		
R4009	1-469-564-11	FERRITE	0UH		
R4010	1-469-564-11	FERRITE	0UH		
R4011	1-216-805-11	METAL CHIP	47	5%	1/10W
R4012	1-469-564-11	FERRITE	0UH		
R4013	1-216-864-11	SHORT CHIP	0		
R4014	1-216-864-11	SHORT CHIP	0		
R4015	1-412-006-31	INDUCTOR	10UH		
R4017	1-412-006-31	INDUCTOR	10UH		
R4018	1-412-006-31	INDUCTOR	10UH		
R4019	1-412-006-31	INDUCTOR	10UH		
R4020	1-412-006-31	INDUCTOR	10UH		
R4022	1-216-813-11	METAL CHIP	220	5%	1/10W
R4023	1-216-837-11	METAL CHIP	22K	5%	1/10W
R4024	1-216-821-11	METAL CHIP	1K	5%	1/10W
R4027	1-216-821-11	METAL CHIP	1K	5%	1/10W
R4028	1-216-821-11	METAL CHIP	1K	5%	1/10W
R4029	1-216-829-11	METAL CHIP	4.7K	5%	1/10W
R4030	1-216-829-11	METAL CHIP	4.7K	5%	1/10W
R4031	1-216-833-11	METAL CHIP	10K	5%	1/10W
R4032	1-216-833-11	METAL CHIP	10K	5%	1/10W
R4035	1-216-841-11	METAL CHIP	47K	5%	1/10W
R4036	1-216-809-11	METAL CHIP	100	5%	1/10W
R4037	1-216-809-11	METAL CHIP	100	5%	1/10W
R4038	1-216-837-11	METAL CHIP	22K	5%	1/10W
R4039	1-216-809-11	METAL CHIP	100	5%	1/10W
R4040	1-216-295-91	SHORT CHIP	0		
R4041	1-216-295-91	SHORT CHIP	0		
R4042	1-216-295-91	SHORT CHIP	0		
R4043	1-216-295-91	SHORT CHIP	0		
R4044	1-216-295-91	SHORT CHIP	0		
R4045	1-216-295-91	SHORT CHIP	0		
R4046	1-216-295-91	SHORT CHIP	0		
R4047	1-216-295-91	SHORT CHIP	0		
R4048	1-216-833-11	METAL CHIP	10K	5%	1/10W
R4049	1-216-833-11	METAL CHIP	10K	5%	1/10W
R4050	1-216-829-11	METAL CHIP	4.7K	5%	1/10W
R4051	1-216-829-11	METAL CHIP	4.7K	5%	1/10W
R4054	1-215-906-11	METAL OXIDE	15	5%	3W
R4060	1-216-821-11	METAL CHIP	1K	5%	1/10W
R4061	1-216-821-11	METAL CHIP	1K	5%	1/10W
R4067	1-216-827-11	METAL CHIP	3.3K	5%	1/10W
R4079	1-216-833-11	METAL CHIP	10K	5%	1/10W
R4080	1-216-864-11	SHORT CHIP	0		
R4081	1-216-864-11	SHORT CHIP	0		
R4082	1-216-864-11	SHORT CHIP	0		
R4083	1-216-864-11	SHORT CHIP	0		
R4084	1-216-864-11	SHORT CHIP	0		
R4085	1-216-864-11	SHORT CHIP	0		
R4086	1-216-864-11	SHORT CHIP	0		

REF.NO.	PART.NO	DESCRIPTION	REMARK
R4101	1-216-864-11	SHORT CHIP 0	
R4102	1-216-864-11	SHORT CHIP 0	
R4103	1-216-864-11	SHORT CHIP 0	
R4104	1-216-864-11	SHORT CHIP 0	
R4105	1-216-864-11	SHORT CHIP 0	
R4106	1-216-864-11	SHORT CHIP 0	
R4107	1-216-864-11	SHORT CHIP 0	
R4108	1-216-864-11	SHORT CHIP 0	
R4109	1-216-864-11	SHORT CHIP 0	
R4110	1-216-864-11	SHORT CHIP 0	
R4111	1-216-864-11	SHORT CHIP 0	
R4112	1-216-864-11	SHORT CHIP 0	
R4113	1-216-864-11	SHORT CHIP 0	
R4114	1-216-864-11	SHORT CHIP 0	
R4115	1-216-864-11	SHORT CHIP 0	
R4116	1-216-864-11	SHORT CHIP 0	
R4117	1-216-864-11	SHORT CHIP 0	
R4118	1-216-864-11	SHORT CHIP 0	
R4119	1-216-864-11	SHORT CHIP 0	
R4120	1-216-864-11	SHORT CHIP 0	
R4121	1-216-864-11	SHORT CHIP 0	
R4122	1-216-864-11	SHORT CHIP 0	
R4123	1-216-864-11	SHORT CHIP 0	
R4124	1-216-864-11	SHORT CHIP 0	
R4127	1-216-812-11	METAL CHIP 180 5% 1/10W	
R4128	1-216-812-11	METAL CHIP 180 5% 1/10W	
R4129	1-216-812-11	METAL CHIP 180 5% 1/10W	
R4130	1-216-812-11	METAL CHIP 180 5% 1/10W	
R4131	1-216-812-11	METAL CHIP 180 5% 1/10W	
R4132	1-216-812-11	METAL CHIP 180 5% 1/10W	
R4133	1-216-812-11	METAL CHIP 180 5% 1/10W	
R4134	1-216-812-11	METAL CHIP 180 5% 1/10W	
		< THERMISTOR >	
TH1701	1-800-193-00	THERMISTOR	
		< TUNER >	
TU1001	8-598-529-10	FRONTEND BTF-EU611	
TU4000	8-598-585-00	FRONT END BTD-DU604	
		< CRYSTAL >	
X1231	1-781-148-21	VIBRATOR, CRYSTAL	
X1401	1-760-895-21	VIBRATOR, CERAMIC	
X4000	1-760-105-11	VIBRATOR, CRYSTAL	

*** A-1401-380-A J3 Board, Complete**

		< CAPACITOR >	
C8105	1-126-933-11	ELECT 100UF	20.00% 16V
C8106	1-126-933-11	ELECT 100UF	20.00% 16V
C8107	1-126-935-11	ELECT 470UF	20.00% 16V
C8108	1-126-933-11	ELECT 100UF	20.00% 16V
C8109	1-164-004-11	CERAMIC CHIP 0.1UF	10.00% 25V
C8110	1-164-004-11	CERAMIC CHIP 0.1UF	10.00% 25V
C8111	1-126-933-11	ELECT 100UF	20.00% 16V
C8316	1-107-701-11	ELECT 47UF	20.00% 25V
C8800	1-164-156-11	CERAMIC CHIP 0.1UF	25V
C8802	1-126-947-11	ELECT 47UF	20.00% 35V
C8803	1-126-947-11	ELECT 47UF	20.00% 35V
C8804	1-164-156-11	CERAMIC CHIP 0.1UF	25V
C8805	1-126-947-11	ELECT 47UF	20.00% 35V
C8844	1-162-974-11	CERAMIC CHIP 0.01UF	50V
C8845	1-162-974-11	CERAMIC CHIP 0.01UF	50V
C8858	1-162-970-11	CERAMIC CHIP 0.01UF	10.00% 25V
C8859	1-126-947-11	ELECT 47UF	20.00% 35V
C8860	1-164-156-11	CERAMIC CHIP 0.1UF	25V
C8863	1-164-156-11	CERAMIC CHIP 0.1UF	25V
C8864	1-162-927-11	CERAMIC CHIP 100PF	5.00% 50V
C8865	1-164-156-11	CERAMIC CHIP 0.1UF	25V
C8866	1-165-908-91	CERAMIC CHIP 1UF	10% 10V
C8867	1-164-156-11	CERAMIC CHIP 0.1UF	25V
C8868	1-164-156-11	CERAMIC CHIP 0.1UF	25V
C8869	1-126-964-11	ELECT 10UF	20.00% 50V
C8870	1-165-908-91	CERAMIC CHIP 1UF	10% 10V
C8871	1-165-908-91	CERAMIC CHIP 1UF	10% 10V
C8872	1-164-156-11	CERAMIC CHIP 0.1UF	25V
C8873	1-165-908-91	CERAMIC CHIP 1UF	10% 10V
C8874	1-164-156-11	CERAMIC CHIP 0.1UF	25V
C8875	1-165-908-91	CERAMIC CHIP 1UF	10% 10V
C8876	1-165-908-91	CERAMIC CHIP 1UF	10% 10V
C8877	1-162-927-11	CERAMIC CHIP 100PF	5.00% 50V
C8878	1-164-156-11	CERAMIC CHIP 0.1UF	25V
C8880	1-126-947-11	ELECT 47UF	20.00% 35V
C8881	1-164-156-11	CERAMIC CHIP 0.1UF	25V
C8882	1-162-970-11	CERAMIC CHIP 0.01UF	10.00% 25V
C8884	1-104-665-11	ELECT 100UF	20.00% 25V
C8885	1-164-156-11	CERAMIC CHIP 0.1UF	25V
C8887	1-164-346-11	CERAMIC CHIP 1UF	16V
C8888	1-164-346-11	CERAMIC CHIP 1UF	16V
C8889	1-126-947-11	ELECT 47UF	20.00% 35V
C8890	1-164-346-11	CERAMIC CHIP 1UF	16V
C8891	1-126-947-11	ELECT 47UF	20.00% 35V
C8892	1-164-346-11	CERAMIC CHIP 1UF	16V
C8893	1-164-346-11	CERAMIC CHIP 1UF	16V
C8894	1-164-346-11	CERAMIC CHIP 1UF	16V
C8895	1-164-346-11	CERAMIC CHIP 1UF	16V
C8896	1-164-346-11	CERAMIC CHIP 1UF	16V
C8897	1-164-346-11	CERAMIC CHIP 1UF	16V
C8898	1-164-346-11	CERAMIC CHIP 1UF	16V

REF.NO.	PART.NO	DESCRIPTION	REMARK
C8899	1-164-346-11	CERAMIC CHIP 1UF	16V
C8900	1-164-346-11	CERAMIC CHIP 1UF	16V
C8901	1-164-156-11	CERAMIC CHIP 0.1UF	25V
C8902	1-164-346-11	CERAMIC CHIP 1UF	16V
C8903	1-126-947-11	ELECT 47UF	20.00% 35V
C8904	1-164-346-11	CERAMIC CHIP 1UF	16V
C8905	1-164-156-11	CERAMIC CHIP 0.1UF	25V
C8906	1-126-964-11	ELECT 10UF	20.00% 50V
C8907	1-164-156-11	CERAMIC CHIP 0.1UF	25V
C8910	1-162-927-11	CERAMIC CHIP 100PF	5.00% 50V
C8912	1-163-227-11	CERAMIC CHIP 10PF	0.50PF 50V
C8913	1-162-964-11	CERAMIC CHIP 0.001UF	10.00% 50V
C8914	1-162-968-11	CERAMIC CHIP 0.0047UF	10.00% 50V
C8915	1-162-968-11	CERAMIC CHIP 0.0047UF	10.00% 50V
C8916	1-162-964-11	CERAMIC CHIP 0.001UF	10.00% 50V
C8917	1-162-968-11	CERAMIC CHIP 0.0047UF	10.00% 50V
C8918	1-162-964-11	CERAMIC CHIP 0.001UF	10.00% 50V
C8919	1-162-964-11	CERAMIC CHIP 0.001UF	10.00% 50V
C8920	1-162-968-11	CERAMIC CHIP 0.0047UF	10.00% 50V
C8921	1-162-964-11	CERAMIC CHIP 0.001UF	10.00% 50V
C8922	1-162-968-11	CERAMIC CHIP 0.0047UF	10.00% 50V
C8923	1-162-964-11	CERAMIC CHIP 0.001UF	10.00% 50V
C8924	1-162-968-11	CERAMIC CHIP 0.0047UF	10.00% 50V
C8934	1-162-962-11	CERAMIC CHIP 470PF	10.00% 50V
C8935	1-162-962-11	CERAMIC CHIP 470PF	10.00% 50V
C8939	1-162-927-11	CERAMIC CHIP 100PF	5.00% 50V
C8940	1-162-927-11	CERAMIC CHIP 100PF	5.00% 50V
C8959	1-107-910-11	ELECT 100UF	20.00% 50V
C8960	1-107-910-11	ELECT 100UF	20.00% 50V
C8961	1-104-665-11	ELECT 100UF	20.00% 25V
C8964	1-126-947-11	ELECT 47UF	20.00% 35V
C8966	1-104-665-11	ELECT 100UF	20.00% 25V
C8967	1-104-665-11	ELECT 100UF	20.00% 25V
C8968	1-126-947-11	ELECT 47UF	20.00% 35V
C8969	1-162-970-11	CERAMIC CHIP 0.01UF	10.00% 25V
C8970	1-104-665-11	ELECT 100UF	20.00% 25V
C8971	1-164-156-11	CERAMIC CHIP 0.1UF	25V
C8982	1-104-665-11	ELECT 100UF	20.00% 25V
C8983	1-104-665-11	ELECT 100UF	20.00% 25V
C8984	1-164-156-11	CERAMIC CHIP 0.1UF	25V
C8986	1-164-156-11	CERAMIC CHIP 0.1UF	25V
C8987	1-164-156-11	CERAMIC CHIP 0.1UF	25V
C8988	1-164-156-11	CERAMIC CHIP 0.1UF	25V
C8989	1-126-947-11	ELECT 47UF	20.00% 35V
C8990	1-165-176-11	CERAMIC CHIP 0.047UF	10.00% 16V
C8991	1-165-176-11	CERAMIC CHIP 0.047UF	10.00% 16V
C8992	1-165-176-11	CERAMIC CHIP 0.047UF	10.00% 16V
C8996	1-162-919-11	CERAMIC CHIP 22PF	5.00% 50V
C8999	1-162-919-11	CERAMIC CHIP 22PF	5.00% 50V
C9001	1-162-919-11	CERAMIC CHIP 22PF	5.00% 50V
C9093	1-162-915-11	CERAMIC CHIP 10PF	0.50PF 50V
C9094	1-107-826-11	CERAMIC CHIP 0.1UF	10.00% 16V
C9095	1-126-947-11	ELECT 47UF	20.00% 35V
C9096	1-124-779-00	ELECT CHIP 10UF	20.00% 16V
C9097	1-165-176-11	CERAMIC CHIP 0.047UF	10.00% 16V
C9098	1-165-176-11	CERAMIC CHIP 0.047UF	10.00% 16V
C9099	1-165-176-11	CERAMIC CHIP 0.047UF	10.00% 16V
C9101	1-162-915-11	CERAMIC CHIP 10PF	0.50PF 50V
C9102	1-162-915-11	CERAMIC CHIP 10PF	0.50PF 50V
C9103	1-162-915-11	CERAMIC CHIP 10PF	0.50PF 50V
C9104	1-162-919-11	CERAMIC CHIP 22PF	5.00% 50V
C9105	1-107-715-11	ELECT 22UF	20.00% 50V
C9106	1-126-947-11	ELECT 47UF	20.00% 35V
C9107	1-162-966-11	CERAMIC CHIP 0.0022UF	10.00% 50V
C9108	1-162-966-11	CERAMIC CHIP 0.0022UF	10.00% 50V
C9182	1-126-947-11	ELECT 47UF	20.00% 35V
C9183	1-164-156-11	CERAMIC CHIP 0.1UF	25V
C9185	1-126-947-11	ELECT 47UF	20.00% 35V
C9186	1-164-156-11	CERAMIC CHIP 0.1UF	25V
C9188	1-104-665-11	ELECT 100UF	20.00% 25V
C9189	1-104-665-11	ELECT 100UF	20.00% 25V
C9190	1-127-715-91	CERAMIC CHIP 0.22UF	10% 16V
C9191	1-127-715-91	CERAMIC CHIP 0.22UF	10% 16V
C9192	1-104-665-11	ELECT 100UF	20.00% 25V
C9193	1-127-715-91	CERAMIC CHIP 0.22UF	10% 16V
C9194	1-104-665-11	ELECT 100UF	20.00% 25V
		< CONNECTOR >	
CN8805	*1-793-498-11	CONNECTOR, BOARD TO BOARD 50P	
CN8806	1-815-672-12	CONNECTOR, RGB 21P	
		< DIODE >	
D8300	8-719-083-57	DIODE UDZSTE-173.6B	
D8800	8-719-056-85	DIODE UDZ-TE-17-8.2B	
D8801	8-719-056-85	DIODE UDZ-TE-17-8.2B	
D8802	8-719-056-85	DIODE UDZ-TE-17-8.2B	
D8803	8-719-108-12	DIODE RD9.1EW	
D8805	8-719-158-49	DIODE RD12SB2	
D8806	8-719-158-49	DIODE RD12SB2	
D8807	8-719-158-49	DIODE RD12SB2	
D8808	8-719-158-49	DIODE RD12SB2	
D8809	8-719-158-49	DIODE RD12SB2	
D8810	8-719-158-49	DIODE RD12SB2	
D8811	8-719-158-49	DIODE RD12SB2	
D8812	8-719-158-49	DIODE RD12SB2	
D8813	8-719-158-49	DIODE RD12SB2	
D8814	8-719-158-49	DIODE RD12SB2	
D8815	8-719-158-49	DIODE RD12SB2	
D8816	8-719-158-49	DIODE RD12SB2	

REF.NO.	PART.NO	DESCRIPTION	REMARK
D8817	8-719-158-49	DIODE RD12SB2	
D8818	8-719-158-49	DIODE RD12SB2	
D8819	8-719-056-85	DIODE UDZ-TE-17-8.2B	
D8820	8-719-158-49	DIODE RD12SB2	
D8821	8-719-056-85	DIODE UDZ-TE-17-8.2B	
D8822	8-719-056-85	DIODE UDZ-TE-17-8.2B	
D8823	8-719-056-85	DIODE UDZ-TE-17-8.2B	
D8824	8-719-056-85	DIODE UDZ-TE-17-8.2B	
D8825	8-719-056-85	DIODE UDZ-TE-17-8.2B	
D8826	8-719-056-85	DIODE UDZ-TE-17-8.2B	
D8827	8-719-056-85	DIODE UDZ-TE-17-8.2B	
D8828	8-719-056-85	DIODE UDZ-TE-17-8.2B	
D8829	8-719-056-85	DIODE UDZ-TE-17-8.2B	
D8830	8-719-158-49	DIODE RD12SB2	
D8831	8-719-158-49	DIODE RD12SB2	
D8832	8-719-158-49	DIODE RD12SB2	
D8833	8-719-158-49	DIODE RD12SB2	
D8839	8-719-108-12	DIODE RD9.1EW	
D8840	8-719-056-85	DIODE UDZ-TE-17-8.2B	
		< FERRITE BEAD >	
FB8800	1-469-869-21	FERRITE 0UH	
		< FILTER >	
FL8808	1-236-071-11	ENCAPSULATED COMPONENT	
FL8809	1-236-071-11	ENCAPSULATED COMPONENT	
FL8811	1-236-071-11	ENCAPSULATED COMPONENT	
		< IC >	
IC8101	8-759-576-76	IC TDA2822D013TR	
IC8800	8-752-072-94	IC CXA1875AM-T4	
IC8806	8-752-096-83	IC CXA2149AQ-TL	
IC8809	8-759-439-64	IC HEF4053BT	
IC8810	8-759-587-03	IC TDA8601T	
		< SOCKET >	
J8800	1-770-989-11	JACK, PIN 2P	
		< COIL >	
L8804	1-412-539-11	INDUCTOR 150UH	
L8805	1-412-539-11	INDUCTOR 150UH	
L8806	1-412-539-11	INDUCTOR 150UH	
		< TRANSISTOR >	
Q8300	8-729-120-28	TRANSISTOR 2SC1623-L5L6	
Q8301	8-729-120-28	TRANSISTOR 2SC1623-L5L6	
Q8302	8-729-120-28	TRANSISTOR 2SC1623-L5L6	
Q8303	8-729-120-28	TRANSISTOR 2SC1623-L5L6	
Q8802	8-729-901-81	TRANSISTOR 2SC2412K-T-146-R	
Q8803	8-729-901-81	TRANSISTOR 2SC2412K-T-146-R	
Q8822	8-729-216-22	TRANSISTOR 2SA1162-G	
Q8823	8-729-038-96	TRANSISTOR IMZ1A-T109	
Q8824	8-729-901-81	TRANSISTOR 2SC2412K-T-146-R	
Q8826	8-729-901-81	TRANSISTOR 2SC2412K-T-146-R	
Q8827	8-729-901-81	TRANSISTOR 2SC2412K-T-146-R	
Q8828	8-729-901-81	TRANSISTOR 2SC2412K-T-146-R	
Q8829	8-729-901-81	TRANSISTOR 2SC2412K-T-146-R	
Q8835	1-801-806-11	TR DTC144EKA	
Q8837	8-729-901-81	TRANSISTOR 2SC2412K-T-146-R	
Q9181	8-729-901-81	TRANSISTOR 2SC2412K-T-146-R	
Q9182	8-729-038-96	TRANSISTOR IMZ1A-T109	
Q9183	8-729-901-81	TRANSISTOR 2SC2412K-T-146-R	
Q9184	8-729-038-96	TRANSISTOR IMZ1A-T109	
Q9205	8-729-901-81	TRANSISTOR 2SC2412K-T-146-R	
Q9206	8-729-901-81	TRANSISTOR 2SC2412K-T-146-R	
Q9211	8-729-038-96	TRANSISTOR IMZ1A-T109	
Q9212	8-729-038-96	TRANSISTOR IMZ1A-T109	
Q9213	8-729-038-96	TRANSISTOR IMZ1A-T109	
		< RESISTOR >	
R8109	1-249-389-11	CARBON 4.7 5% 1/4W	
R8110	1-249-389-11	CARBON 4.7 5% 1/4W	
R8115	1-216-029-00	RES-CHIP 150 5% 1/10W	
R8116	1-216-029-00	RES-CHIP 150 5% 1/10W	
R8117	1-216-029-00	RES-CHIP 150 5% 1/10W	
R8118	1-216-029-00	RES-CHIP 150 5% 1/10W	
R8800	1-216-815-11	METAL CHIP 330 5% 1/10W	
R8801	1-218-285-11	METAL CHIP 75 5% 1/10W	
R8802	1-216-813-11	METAL CHIP 220 5% 1/10W	
R8804	1-216-049-11	RES-CHIP 1K 5% 1/10W	
R8805	1-216-049-11	RES-CHIP 1K 5% 1/10W	
R8806	1-216-864-11	SHORT CHIP 0	
R8807	1-216-809-11	METAL CHIP 100 5% 1/10W	
R8808	1-216-809-11	METAL CHIP 100 5% 1/10W	
R8809	1-216-815-11	METAL CHIP 330 5% 1/10W	
R8811	1-216-805-11	METAL CHIP 47 5% 1/10W	
R8817	1-216-864-11	SHORT CHIP 0	
R8829	1-216-805-11	METAL CHIP 47 5% 1/10W	
R8830	1-216-805-11	METAL CHIP 47 5% 1/10W	
R8866	1-216-809-11	METAL CHIP 100 5% 1/10W	
R8868	1-216-864-11	SHORT CHIP 0	
R8870	1-216-839-11	METAL CHIP 33K 5% 1/10W	
R8871	1-216-864-11	SHORT CHIP 0	
R8877	1-216-864-11	SHORT CHIP 0	
R8880	1-216-809-11	METAL CHIP 100 5% 1/10W	
R8881	1-216-817-11	METAL CHIP 470 5% 1/10W	
R8882	1-216-817-11	METAL CHIP 470 5% 1/10W	
R8883	1-216-817-11	METAL CHIP 470 5% 1/10W	
R8884	1-216-817-11	METAL CHIP 470 5% 1/10W	

REF.NO.	PART.NO	DESCRIPTION			REMARK
R8886	1-216-809-11	METAL CHIP	100	5%	1/10W
R8887	1-216-839-11	METAL CHIP	33K	5%	1/10W
R8890	1-211-985-11	METAL CHIP	47	0.5%	1/10W
R8891	1-218-839-11	METAL CHIP	470	0.5%	1/10W
R8893	1-218-827-11	METAL CHIP	150	0.5%	1/10W
R8894	1-218-831-11	METAL CHIP	220	0.5%	1/10W
R8895	1-218-851-11	METAL CHIP	1.5K	0.5%	1/10W
R8896	1-216-836-11	METAL CHIP	18K	5%	1/10W
R8897	1-216-825-11	METAL CHIP	2.2K	5%	1/10W
R8898	1-216-864-11	SHORT CHIP	0		
R8900	1-216-864-11	SHORT CHIP	0		
R8902	1-218-285-11	METAL CHIP	75	5%	1/10W
R8903	1-216-821-11	METAL CHIP	1K	5%	1/10W
R8904	1-216-805-11	METAL CHIP	47	5%	1/10W
R8905	1-216-813-11	METAL CHIP	220	5%	1/10W
R8907	1-216-821-11	METAL CHIP	1K	5%	1/10W
R8908	1-216-825-11	METAL CHIP	2.2K	5%	1/10W
R8909	1-216-113-00	RES-CHIP	470K	5%	1/10W
R8910	1-216-825-11	METAL CHIP	2.2K	5%	1/10W
R8911	1-216-113-00	RES-CHIP	470K	5%	1/10W
R8912	1-216-843-11	METAL CHIP	68K	5%	1/10W
R8913	1-216-843-11	METAL CHIP	68K	5%	1/10W
R8914	1-218-885-11	METAL CHIP	39K	0.5%	1/10W
R8915	1-216-864-11	SHORT CHIP	0		
R8916	1-216-836-11	METAL CHIP	18K	5%	1/10W
R8917	1-216-827-11	METAL CHIP	3.3K	5%	1/10W
R8919	1-216-827-11	METAL CHIP	3.3K	5%	1/10W
R8921	1-216-809-11	METAL CHIP	100	5%	1/10W
R8922	1-216-809-11	METAL CHIP	100	5%	1/10W
R8923	1-216-864-11	SHORT CHIP	0		
R8925	1-216-864-11	SHORT CHIP	0		
R8926	1-216-864-11	SHORT CHIP	0		
R8931	1-216-816-11	METAL CHIP	390	5%	1/10W
R8932	1-216-864-11	SHORT CHIP	0		
R8933	1-216-816-11	METAL CHIP	390	5%	1/10W
R8934	1-216-841-11	METAL CHIP	47K	5%	1/10W
R8935	1-216-841-11	METAL CHIP	47K	5%	1/10W
R8936	1-216-113-00	RES-CHIP	470K	5%	1/10W
R8937	1-216-814-11	METAL CHIP	270	5%	1/10W
R8938	1-218-859-11	METAL CHIP	3.3K	0.5%	1/10W
R8939	1-216-814-11	METAL CHIP	270	5%	1/10W
R8940	1-216-864-11	SHORT CHIP	0		
R8941	1-216-809-11	METAL CHIP	100	5%	1/10W
R8942	1-218-285-11	METAL CHIP	75	5%	1/10W
R8944	1-216-071-00	RES-CHIP	8.2K	5%	1/10W
R8945	1-218-285-11	METAL CHIP	75	5%	1/10W
R8946	1-216-813-11	METAL CHIP	220	5%	1/10W
R8947	1-216-813-11	METAL CHIP	220	5%	1/10W
R8948	1-216-113-00	RES-CHIP	470K	5%	1/10W
R8949	1-218-859-11	METAL CHIP	3.3K	0.5%	1/10W
R8950	1-218-285-11	METAL CHIP	75	5%	1/10W
R8951	1-218-285-11	METAL CHIP	75	5%	1/10W
R8952	1-218-285-11	METAL CHIP	75	5%	1/10W
R8953	1-218-285-11	METAL CHIP	75	5%	1/10W
R8954	1-218-285-11	METAL CHIP	75	5%	1/10W
R8955	1-216-813-11	METAL CHIP	220	5%	1/10W
R8956	1-216-813-11	METAL CHIP	220	5%	1/10W
R8958	1-216-017-91	RES-CHIP	47	5%	1/10W
R8959	1-216-816-11	METAL CHIP	390	5%	1/10W
R8960	1-216-864-11	SHORT CHIP	0		
R8961	1-216-816-11	METAL CHIP	390	5%	1/10W
R8962	1-216-864-11	SHORT CHIP	0		
R8963	1-216-841-11	METAL CHIP	47K	5%	1/10W
R8964	1-216-841-11	METAL CHIP	47K	5%	1/10W
R8965	1-216-113-00	RES-CHIP	470K	5%	1/10W
R8966	1-216-113-00	RES-CHIP	470K	5%	1/10W
R8967	1-216-814-11	METAL CHIP	270	5%	1/10W
R8968	1-218-859-11	METAL CHIP	3.3K	0.5%	1/10W
R8969	1-216-814-11	METAL CHIP	270	5%	1/10W
R8970	1-218-859-11	METAL CHIP	3.3K	0.5%	1/10W
R8971	1-216-809-11	METAL CHIP	100	5%	1/10W
R8972	1-216-801-11	METAL CHIP	22	5%	1/10W
R8973	1-218-285-11	METAL CHIP	75	5%	1/10W
R8974	1-218-285-11	METAL CHIP	75	5%	1/10W
R8975	1-216-813-11	METAL CHIP	220	5%	1/10W
R8976	1-216-816-11	METAL CHIP	390	5%	1/10W
R8977	1-216-864-11	SHORT CHIP	0		
R8978	1-218-285-11	METAL CHIP	75	5%	1/10W
R8979	1-216-841-11	METAL CHIP	47K	5%	1/10W
R8980	1-216-017-91	RES-CHIP	47	5%	1/10W
R8981	1-216-113-00	RES-CHIP	470K	5%	1/10W
R8982	1-216-814-11	METAL CHIP	270	5%	1/10W
R8983	1-218-859-11	METAL CHIP	3.3K	0.5%	1/10W
R8984	1-216-816-11	METAL CHIP	390	5%	1/10W
R8985	1-216-864-11	SHORT CHIP	0		
R8986	1-216-809-11	METAL CHIP	100	5%	1/10W
R8987	1-216-841-11	METAL CHIP	47K	5%	1/10W
R8988	1-218-285-11	METAL CHIP	75	5%	1/10W
R8989	1-216-813-11	METAL CHIP	220	5%	1/10W
R8990	1-218-285-11	METAL CHIP	75	5%	1/10W
R8991	1-216-071-00	RES-CHIP	8.2K	5%	1/10W
R8992	1-216-113-00	RES-CHIP	470K	5%	1/10W
R8993	1-216-814-11	METAL CHIP	270	5%	1/10W
R8994	1-218-859-11	METAL CHIP	3.3K	0.5%	1/10W
R8996	1-216-017-91	RES-CHIP	47	5%	1/10W
R9004	1-218-285-11	METAL CHIP	75	5%	1/10W
R9005	1-216-813-11	METAL CHIP	220	5%	1/10W
R9006	1-216-832-11	METAL CHIP	8.2K	5%	1/10W
R9007	1-216-839-11	METAL CHIP	33K	5%	1/10W
R9008	1-216-849-11	METAL CHIP	220K	5%	1/10W

REF.NO.	PART.NO	DESCRIPTION			REMARK
R9018	1-216-864-11	SHORT CHIP	0		
R9020	1-216-809-11	METAL CHIP	100	5%	1/10W
R9021	1-216-809-11	METAL CHIP	100	5%	1/10W
R9022	1-216-864-11	SHORT CHIP	0		
R9023	1-216-864-11	SHORT CHIP	0		
R9043	1-216-821-11	METAL CHIP	1K	5%	1/10W
R9045	1-216-821-11	METAL CHIP	1K	5%	1/10W
R9051	1-216-841-11	METAL CHIP	47K	5%	1/10W
R9052	1-216-841-11	METAL CHIP	47K	5%	1/10W
R9053	1-216-839-11	METAL CHIP	33K	5%	1/10W
R9055	1-216-841-11	METAL CHIP	47K	5%	1/10W
R9059	1-216-825-11	METAL CHIP	2.2K	5%	1/10W
R9063	1-216-864-11	SHORT CHIP	0		
R9077	1-216-808-11	METAL CHIP	82	5%	1/10W
R9084	1-216-825-11	METAL CHIP	2.2K	5%	1/10W
R9085	1-216-825-11	METAL CHIP	2.2K	5%	1/10W
R9086	1-218-867-11	METAL CHIP	6.8K	0.5%	1/10W
R9088	1-218-867-11	METAL CHIP	6.8K	0.5%	1/10W
R9089	1-216-797-11	METAL CHIP	10	5%	1/10W
R9090	1-216-797-11	METAL CHIP	10	5%	1/10W
R9094	1-216-809-11	METAL CHIP	100	5%	1/10W
R9095	1-216-833-11	METAL CHIP	10K	5%	1/10W
R9099	1-216-809-11	METAL CHIP	100	5%	1/10W
R9100	1-216-864-11	SHORT CHIP	0		
R9104	1-218-843-11	METAL CHIP	680	0.5%	1/10W
R9105	1-218-843-11	METAL CHIP	680	0.5%	1/10W
R9106	1-216-825-11	METAL CHIP	2.2K	5%	1/10W
R9107	1-216-825-11	METAL CHIP	2.2K	5%	1/10W
R9108	1-216-837-11	METAL CHIP	22K	5%	1/10W
R9109	1-216-837-11	METAL CHIP	22K	5%	1/10W
R9110	1-216-813-11	METAL CHIP	220	5%	1/10W
R9111	1-216-813-11	METAL CHIP	220	5%	1/10W
R9113	1-216-864-11	SHORT CHIP	0		
R9114	1-216-864-11	SHORT CHIP	0		
R9115	1-216-864-11	SHORT CHIP	0		
R9116	1-216-864-11	SHORT CHIP	0		
R9117	1-216-864-11	SHORT CHIP	0		
R9118	1-216-864-11	SHORT CHIP	0		
R9119	1-216-864-11	SHORT CHIP	0		
R9120	1-216-864-11	SHORT CHIP	0		
R9121	1-216-864-11	SHORT CHIP	0		
R9142	1-216-864-11	SHORT CHIP	0		
R9143	1-216-864-11	SHORT CHIP	0		
R9144	1-216-864-11	SHORT CHIP	0		
R9147	1-216-809-11	METAL CHIP	100	5%	1/10W
R9148	1-218-871-11	METAL CHIP	10K	0.5%	1/10W
R9149	1-216-864-11	SHORT CHIP	0		
R9150	1-218-871-11	METAL CHIP	10K	0.5%	1/10W
R9151	1-216-864-11	SHORT CHIP	0		
R9170	1-216-295-91	SHORT CHIP	0		
R9171	1-216-295-91	SHORT CHIP	0		
R9174	1-216-805-11	METAL CHIP	47	5%	1/10W
R9175	1-218-285-11	METAL CHIP	75	5%	1/10W
R9176	1-216-813-11	METAL CHIP	220	5%	1/10W
R9178	1-216-864-11	SHORT CHIP	0		
R9179	1-216-805-11	METAL CHIP	47	5%	1/10W
R9180	1-216-805-11	METAL CHIP	47	5%	1/10W
R9181	1-216-815-11	METAL CHIP	330	5%	1/10W
R9182	1-216-864-11	SHORT CHIP	0		
R9185	1-216-864-11	SHORT CHIP	0		
R9186	1-216-843-11	METAL CHIP	68K	5%	1/10W
R9187	1-216-837-11	METAL CHIP	22K	5%	1/10W
R9188	1-216-817-11	METAL CHIP	470	5%	1/10W
R9189	1-216-817-11	METAL CHIP	470	5%	1/10W
R9190	1-216-864-11	SHORT CHIP	0		
R9191	1-218-843-11	METAL CHIP	680	0.5%	1/10W
R9192	1-216-815-11	METAL CHIP	330	5%	1/10W
R9193	1-216-864-11	SHORT CHIP	0		
R9196	1-216-864-11	SHORT CHIP	0		
R9197	1-216-091-00	RES-CHIP	56K	5%	1/10W
R9198	1-216-837-11	METAL CHIP	22K	5%	1/10W
R9199	1-216-817-11	METAL CHIP	470	5%	1/10W
R9200	1-216-817-11	METAL CHIP	470	5%	1/10W
R9201	1-216-864-11	SHORT CHIP	0		
R9202	1-218-843-11	METAL CHIP	680	0.5%	1/10W
R9203	1-216-864-11	SHORT CHIP	0		
R9204	1-216-864-11	SHORT CHIP	0		
R9217	1-216-809-11	METAL CHIP	100	5%	1/10W
R9218	1-216-809-11	METAL CHIP	100	5%	1/10W
R9219	1-216-821-11	METAL CHIP	1K	5%	1/10W
R9221	1-216-864-11	SHORT CHIP	0		
R9222	1-216-821-11	METAL CHIP	1K	5%	1/10W
R9223	1-216-841-11	METAL CHIP	47K	5%	1/10W
R9224	1-216-841-11	METAL CHIP	47K	5%	1/10W
R9228	1-216-841-11	METAL CHIP	47K	5%	1/10W
R9229	1-216-841-11	METAL CHIP	47K	5%	1/10W
R9230	1-218-835-11	METAL CHIP	330	0.5%	1/10W
R9231	1-218-835-11	METAL CHIP	330	0.5%	1/10W
R9245	1-216-821-11	METAL CHIP	1K	5%	1/10W
R9247	1-216-864-11	SHORT CHIP	0		
R9248	1-216-817-11	METAL CHIP	470	5%	1/10W
R9250	1-218-725-11	METAL CHIP	24K	0.5%	1/16W
R9251	1-216-813-11	METAL CHIP	220	5%	1/10W
R9252	1-216-842-11	METAL CHIP	56K	5%	1/10W
R9253	1-216-817-11	METAL CHIP	470	5%	1/10W
R9254	1-216-821-11	METAL CHIP	1K	5%	1/10W
R9255	1-216-813-11	METAL CHIP	220	5%	1/10W
R9256	1-216-864-11	SHORT CHIP	0		
R9257	1-216-817-11	METAL CHIP	470	5%	1/10W
R9258	1-216-842-11	METAL CHIP	56K	5%	1/10W

REF.NO.	PART.NO	DESCRIPTION			REMARK
R9259	1-218-725-11	METAL CHIP	24K	0.5%	1/16W
R9260	1-216-817-11	METAL CHIP	470	5%	1/10W
R9261	1-216-821-11	METAL CHIP	1K	5%	1/10W
R9262	1-216-813-11	METAL CHIP	220	5%	1/10W
R9263	1-216-864-11	SHORT CHIP	0		
R9264	1-216-817-11	METAL CHIP	470	5%	1/10W
R9265	1-216-842-11	METAL CHIP	56K	5%	1/10W
R9266	1-218-725-11	METAL CHIP	24K	0.5%	1/16W
R9267	1-216-817-11	METAL CHIP	470	5%	1/10W
R9321	1-216-864-11	SHORT CHIP	0		
R9325	1-216-864-11	SHORT CHIP	0		
R9331	1-216-864-11	SHORT CHIP	0		
R9867	1-216-817-11	METAL CHIP	470	5%	1/10W
R9868	1-216-817-11	METAL CHIP	470	5%	1/10W
R9869	1-216-817-11	METAL CHIP	470	5%	1/10W
R9870	1-216-817-11	METAL CHIP	470	5%	1/10W
R9871	1-216-864-11	SHORT CHIP	0		
R9872	1-216-864-11	SHORT CHIP	0		

* A-1401-432-A M2 Board, Complete

< CAPACITOR >

C103	1-162-921-11	CERAMIC CHIP	33PF	5.00% 50V
C104	1-162-921-11	CERAMIC CHIP	33PF	5.00% 50V
C105	1-107-826-11	CERAMIC CHIP	0.1UF	10.00% 16V
C107	1-107-826-11	CERAMIC CHIP	0.1UF	10.00% 16V
C108	1-107-826-11	CERAMIC CHIP	0.1UF	10.00% 16V
C109	1-162-927-11	CERAMIC CHIP	100PF	5.00% 50V
C110	1-162-927-11	CERAMIC CHIP	100PF	5.00% 50V
C111	1-107-826-11	CERAMIC CHIP	0.1UF	10.00% 16V
C112	1-162-927-11	CERAMIC CHIP	100PF	5.00% 50V
C113	1-107-826-11	CERAMIC CHIP	0.1UF	10.00% 16V
C114	1-162-927-11	CERAMIC CHIP	100PF	5.00% 50V
C115	1-107-826-11	CERAMIC CHIP	0.1UF	10.00% 16V
C116	1-162-927-11	CERAMIC CHIP	100PF	5.00% 50V
C117	1-107-826-11	CERAMIC CHIP	0.1UF	10.00% 16V
C118	1-107-826-11	CERAMIC CHIP	0.1UF	10.00% 16V
C119	1-162-927-11	CERAMIC CHIP	100PF	5.00% 50V
C120	1-107-826-11	CERAMIC CHIP	0.1UF	10.00% 16V
C121	1-162-927-11	CERAMIC CHIP	100PF	5.00% 50V
C122	1-107-826-11	CERAMIC CHIP	0.1UF	10.00% 16V
C123	1-162-927-11	CERAMIC CHIP	100PF	5.00% 50V
C124	1-107-826-11	CERAMIC CHIP	0.1UF	10.00% 16V
C125	1-162-927-11	CERAMIC CHIP	100PF	5.00% 50V
C126	1-107-826-11	CERAMIC CHIP	0.1UF	10.00% 16V
C127	1-162-927-11	CERAMIC CHIP	100PF	5.00% 50V
C128	1-115-467-11	CERAMIC CHIP	0.22UF	10.00% 10V
C129	1-115-467-11	CERAMIC CHIP	0.22UF	10.00% 10V
C130	1-126-964-11	ELECT	10UF	20.00% 50V
C131	1-126-964-11	ELECT	10UF	20.00% 50V
C132	1-126-964-11	ELECT	10UF	20.00% 50V
C133	1-107-826-11	CERAMIC CHIP	0.1UF	10.00% 16V
C134	1-162-927-11	CERAMIC CHIP	100PF	5.00% 50V
C135	1-126-947-11	ELECT	47UF	20.00% 35V
C136	1-126-947-11	ELECT	47UF	20.00% 35V
C137	1-126-947-11	ELECT	47UF	20.00% 35V
C138	1-126-947-11	ELECT	47UF	20.00% 35V
C139	1-126-947-11	ELECT	47UF	20.00% 35V
C140	1-107-826-11	CERAMIC CHIP	0.1UF	10.00% 16V
C141	1-107-826-11	CERAMIC CHIP	0.1UF	10.00% 16V
C142	1-107-826-11	CERAMIC CHIP	0.1UF	10.00% 16V
C143	1-107-826-11	CERAMIC CHIP	0.1UF	10.00% 16V
C144	1-107-826-11	CERAMIC CHIP	0.1UF	10.00% 16V
C145	1-162-927-11	CERAMIC CHIP	100PF	5.00% 50V
C146	1-162-927-11	CERAMIC CHIP	100PF	5.00% 50V
C147	1-162-927-11	CERAMIC CHIP	100PF	5.00% 50V
C148	1-162-927-11	CERAMIC CHIP	100PF	5.00% 50V
C149	1-162-927-11	CERAMIC CHIP	100PF	5.00% 50V
C150	1-107-823-11	CERAMIC CHIP	0.47UF	10.00% 16V

< CONNECTOR >

CN100	*1-793-497-11	CONNECTOR, BOARD TO BOARD 40P
CN104	*1-564-509-11	PLUG, CONNECTOR 6P

< FERRITE BEAD >

FB103	1-414-766-22	FERRITE	0UH
FB104	1-414-766-22	FERRITE	0UH
FB105	1-414-766-22	FERRITE	0UH
FB106	1-414-766-22	FERRITE	0UH
FB107	1-414-766-22	FERRITE	0UH
FB108	1-414-766-22	FERRITE	0UH
FB109	1-414-766-22	FERRITE	0UH
FB111	1-414-766-22	FERRITE	0UH
FB112	1-414-766-22	FERRITE	0UH
FB135	1-414-766-22	FERRITE	0UH

< FILTER >

FL100	1-233-736-21	FILTER, EMI
FL101	1-233-736-21	FILTER, EMI
FL102	1-233-736-21	FILTER, EMI
FL103	1-233-736-21	FILTER, EMI
FL104	1-233-736-21	FILTER, EMI

< IC >

IC101	6-702-313-01	IC PST600IMT
IC103	6-702-057-01	IC SDA6000-B11-GEG
IC104	8-759-682-41	IC M24C32-WMN6T(A)
IC105	6-700-622-01	IC K4S281632C-TC75T
IC106	6-701-848-01	IC KF25BDT
IC107	6-701-849-01	IC M27V160-100K1

REF.NO.	PART.NO	DESCRIPTION	REMARK
	< TRANSISTOR >		
Q101	8-729-120-28	TRANSISTOR 2SC1623-L5L6	
Q102	1-801-806-11	TRANSISTOR DTC144EKA	
Q103	8-729-120-28	TRANSISTOR 2SC1623-L5L6	
Q104	8-729-120-28	TRANSISTOR 2SC1623-L5L6	
Q105	8-729-120-28	TRANSISTOR 2SC1623-L5L6	
Q106	8-729-120-28	TRANSISTOR 2SC1623-L5L6	
Q108	8-729-028-28	TRANSISTOR 2SK2036(TE85L)	
Q109	8-729-028-28	TRANSISTOR 2SK2036(TE85L)	
Q111	8-729-028-28	TRANSISTOR 2SK2036(TE85L)	
Q112	8-729-026-49	TRANSISTOR 2SA1037AK-T146-R	
Q113	8-729-026-49	TRANSISTOR 2SA1037AK-T146-R	
Q114	8-729-026-49	TRANSISTOR 2SA1037AK-T146-R	
Q116	8-729-027-46	TRANSISTOR DTC114YKA-T146	
Q117	8-729-120-28	TRANSISTOR 2SC1623-L5L6	
Q118	8-729-027-46	TRANSISTOR DTC114YKA-T146	
Q119	8-729-027-46	TRANSISTOR DTC114YKA-T146	
Q120	8-729-027-46	TRANSISTOR DTC114YKA-T146	
	< RESISTOR >		
R101	1-216-864-11	SHORT CHIP 0	
R102	1-216-833-11	METAL CHIP 10K 5%	1/10W
R123	1-216-829-11	METAL CHIP 4.7K 5%	1/10W
R124	1-216-864-11	SHORT CHIP 0	
R125	1-216-829-11	METAL CHIP 4.7K 5%	1/10W
R126	1-216-833-11	METAL CHIP 10K 5%	1/10W
R127	1-216-864-11	SHORT CHIP 0	
R130	1-216-821-11	METAL CHIP 1K 5%	1/10W
R132	1-216-833-11	METAL CHIP 10K 5%	1/10W
R133	1-216-833-11	METAL CHIP 10K 5%	1/10W
R134	1-216-833-11	METAL CHIP 10K 5%	1/10W
R137	1-216-833-11	METAL CHIP 10K 5%	1/10W
R138	1-216-833-11	METAL CHIP 10K 5%	1/10W
R139	1-216-833-11	METAL CHIP 10K 5%	1/10W
R140	1-216-833-11	METAL CHIP 10K 5%	1/10W
R141	1-216-833-11	METAL CHIP 10K 5%	1/10W
R142	1-216-833-11	METAL CHIP 10K 5%	1/10W
R143	1-216-832-11	METAL CHIP 8.2K 5%	1/10W
R144	1-216-845-11	METAL CHIP 100K 5%	1/10W
R145	1-216-833-11	METAL CHIP 10K 5%	1/10W
R146	1-216-812-11	METAL CHIP 180 5%	1/10W
R158	1-216-825-11	METAL CHIP 2.2K 5%	1/10W
R159	1-216-833-11	METAL CHIP 10K 5%	1/10W
R161	1-216-825-11	METAL CHIP 2.2K 5%	1/10W
R163	1-216-864-11	SHORT CHIP 0	
R164	1-216-833-11	METAL CHIP 10K 5%	1/10W
R165	1-216-824-11	METAL CHIP 1.8K 5%	1/10W
R166	1-216-824-11	METAL CHIP 1.8K 5%	1/10W
R167	1-216-825-11	METAL CHIP 2.2K 5%	1/10W
R168	1-216-827-11	METAL CHIP 3.3K 5%	1/10W
R169	1-216-827-11	METAL CHIP 3.3K 5%	1/10W
R170	1-216-833-11	METAL CHIP 10K 5%	1/10W
R171	1-216-821-11	METAL CHIP 1K 5%	1/10W
R172	1-216-821-11	METAL CHIP 1K 5%	1/10W
R173	1-216-821-11	METAL CHIP 1K 5%	1/10W
R174	1-216-824-11	METAL CHIP 1.8K 5%	1/10W
R175	1-216-824-11	METAL CHIP 1.8K 5%	1/10W
R176	1-216-824-11	METAL CHIP 1.8K 5%	1/10W
R177	1-216-805-11	METAL CHIP 47 5%	1/10W
R178	1-216-805-11	METAL CHIP 47 5%	1/10W
R179	1-216-805-11	METAL CHIP 47 5%	1/10W
R180	1-216-833-11	METAL CHIP 10K 5%	1/10W
R181	1-216-833-11	METAL CHIP 10K 5%	1/10W
R182	1-216-833-11	METAL CHIP 10K 5%	1/10W
R183	1-216-809-11	METAL CHIP 100 5%	1/10W
R184	1-216-833-11	METAL CHIP 10K 5%	1/10W
R185	1-216-833-11	METAL CHIP 10K 5%	1/10W
R186	1-216-808-11	METAL CHIP 82 5%	1/10W
R187	1-216-833-11	METAL CHIP 10K 5%	1/10W
R188	1-216-827-11	METAL CHIP 3.3K 5%	1/10W
R189	1-216-827-11	METAL CHIP 3.3K 5%	1/10W
R190	1-216-801-11	METAL CHIP 22 5%	1/10W
R191	1-216-801-11	METAL CHIP 22 5%	1/10W
R192	1-216-801-11	METAL CHIP 22 5%	1/10W
R193	1-216-801-11	METAL CHIP 22 5%	1/10W
R194	1-216-801-11	METAL CHIP 22 5%	1/10W
R195	1-216-801-11	METAL CHIP 22 5%	1/10W
R196	1-216-801-11	METAL CHIP 22 5%	1/10W
R197	1-216-801-11	METAL CHIP 22 5%	1/10W
R200	1-216-829-11	METAL CHIP 4.7K 5%	1/10W
R201	1-216-864-11	SHORT CHIP 0	
R212	1-218-835-11	METAL CHIP 330 0.5%	1/10W
R215	1-216-829-11	METAL CHIP 4.7K 5%	1/10W
R218	1-216-864-11	SHORT CHIP 0	
R227	1-216-801-11	METAL CHIP 22 5%	1/10W
R228	1-216-864-11	SHORT CHIP 0	
R229	1-216-864-11	SHORT CHIP 0	
R230	1-216-864-11	SHORT CHIP 0	
R232	1-216-864-11	SHORT CHIP 0	
R233	1-216-864-11	SHORT CHIP 0	
R234	1-216-864-11	SHORT CHIP 0	
R235	1-216-864-11	SHORT CHIP 0	
R236	1-216-864-11	SHORT CHIP 0	
R237	1-216-864-11	SHORT CHIP 0	
R240	1-216-845-11	METAL CHIP 100K 5%	1/10W
R245	1-216-845-11	METAL CHIP 100K 5%	1/10W
R246	1-216-864-11	SHORT CHIP 0	
R247	1-216-864-11	SHORT CHIP 0	
R248	1-216-827-11	METAL CHIP 3.3K 5%	1/10W

REF.NO.	PART.NO	DESCRIPTION	REMARK
R249	1-216-827-11	METAL CHIP 3.3K 5%	1/10W
		< RESISTOR CHIP >	
RB100	1-239-621-11	NETWORK RESISTOR (CHIP) 22	
RB101	1-239-621-11	NETWORK RESISTOR (CHIP) 22	
RB102	1-239-621-11	NETWORK RESISTOR (CHIP) 22	
RB103	1-239-621-11	NETWORK RESISTOR (CHIP) 22	
RB104	1-239-621-11	NETWORK RESISTOR (CHIP) 22	
RB105	1-239-621-11	NETWORK RESISTOR (CHIP) 22	
RB106	1-239-711-91	NETWORK RESISTOR (CHIP) 0	
RB107	1-239-711-91	NETWORK RESISTOR (CHIP) 0	
RB108	1-239-711-91	NETWORK RESISTOR (CHIP) 0	
RB109	1-239-711-91	NETWORK RESISTOR (CHIP) 0	
RB110	1-239-711-91	NETWORK RESISTOR (CHIP) 0	
RB111	1-239-711-91	NETWORK RESISTOR (CHIP) 0	
RB112	1-239-711-91	NETWORK RESISTOR (CHIP) 0	
RB113	1-239-621-11	NETWORK RESISTOR (CHIP) 22	
RB114	1-239-621-11	NETWORK RESISTOR (CHIP) 22	
RB115	1-239-621-11	NETWORK RESISTOR (CHIP) 22	
RB116	1-239-621-11	NETWORK RESISTOR (CHIP) 22	
RB117	1-239-621-11	NETWORK RESISTOR (CHIP) 22	
RB118	1-239-621-11	NETWORK RESISTOR (CHIP) 22	
RB119	1-239-621-11	NETWORK RESISTOR (CHIP) 22	
RB120	1-239-390-11	NETWORK RESISTOR (CHIP) 33	
RB121	1-234-524-21	RES, CHIP NETWORK 33	
RB122	1-234-524-21	RES, CHIP NETWORK 33	
RB123	1-234-524-21	RES, CHIP NETWORK 33	
		< CRYSTAL >	
X100	1-567-162-00	OSCILLATOR, CRYSTAL	

*** A-1401-267-A VM Board, Complete**

	4-382-854-01	SCREW (M3X8), P, SW (+)		
		< CAPACITOR >		
C5400	1-107-883-11	ELECT	330UF	20.00% 16V
C5401	1-126-935-11	ELECT	470UF	20.00% 16V
C5402	1-137-150-11	FILM	0.01UF	5.00% 100V
C5403	1-126-935-11	ELECT	470UF	20.00% 16V
C5405	1-126-933-11	ELECT	100UF	20.00% 16V
C5406	1-126-935-11	ELECT	470UF	20.00% 16V
C5407	1-107-364-11	MYLAR	0.01UF	10.00% 200V
C5408	1-107-364-11	MYLAR	0.01UF	10.00% 200V
C5409	1-107-649-11	ELECT	2.2UF	20.00% 250V
C5410	1-130-471-00	MYLAR	0.001UF	5.00% 50V
C5411	1-130-471-00	MYLAR	0.001UF	5.00% 50V
C5412	1-126-935-11	ELECT	470UF	20.00% 16V
C5413	1-126-935-11	ELECT	470UF	20.00% 16V
C5414	1-107-652-11	ELECT	10UF	20.00% 250V
C5415	1-107-363-91	MYLAR	0.0068UF	10.00% 200V
C5417	1-102-514-11	CERAMIC	22PF	5.00% 50V
C5418	1-101-880-00	CERAMIC	47PF	5.00% 50V
		< CONNECTOR >		
CN5402	*1-564-506-11	PLUG, CONNECTOR 3P		
CN5444	*1-770-723-11	CONNECTOR, BOARD TO BOARD 8P		
CN5602	*1-564-508-11	PLUG, CONNECTOR 5P		
		< DIODE >		
D5400	8-719-991-33	DIODE 1SS133T-77		
D5401	8-719-510-02	DIODE D1NS4		
D5402	1-535-303-00	LEAD, JUMPER (5.0MM)		
D5403	8-719-991-33	DIODE 1SS133T-77		
D5404	8-719-991-33	DIODE 1SS133T-77		
D5405	8-719-924-11	DIODE MTZJ-T-77-22		
D5406	8-719-924-11	DIODE MTZJ-T-77-22		
		< FERRITE BEAD >		
FB5400	1-535-303-00	LEAD, JUMPER (5.0MM)		
FB5401	1-535-303-00	LEAD, JUMPER (5.0MM)		
		< COIL >		
L5400	1-410-784-41	INDUCTOR	0.18UH	
L5401	1-414-930-21	INDUCTOR	2.2UH	
		< TRANSISTOR >		
Q5400	8-729-119-78	TRANSISTOR 2SC2785-HFE		
Q5401	8-729-119-78	TRANSISTOR 2SC2785-HFE		
Q5402	8-729-119-78	TRANSISTOR 2SC2785-HFE		
Q5403	8-729-119-78	TRANSISTOR 2SC2785-HFE		
Q5404	8-729-026-39	TRANSISTOR 2SA933AS-QT		
Q5405	8-729-026-39	TRANSISTOR 2SA933AS-QT		
Q5406	8-729-045-05	TRANSISTOR 2SA2005		
Q5407	8-729-045-04	TRANSISTOR 2SC5511		
Q5408	8-729-026-39	TRANSISTOR 2SA933AS-QT		
Q5409	8-729-119-78	TRANSISTOR 2SC2785-HFE		
		< RESISTOR >		
R5401	1-247-843-11	CARBON	3.3K 5%	1/4W
R5402	1-249-413-11	CARBON	470 5%	1/4W
R5403	1-249-393-11	CARBON	10 5%	1/4W
R5404	1-249-420-11	CARBON	1.8K 5%	1/4W
R5405	1-249-425-11	CARBON	4.7K 5%	1/4W
R5406	1-249-425-11	CARBON	4.7K 5%	1/4W
R5407	1-249-399-11	CARBON	33 5%	1/4W
R5408	1-247-807-31	CARBON	100 5%	1/4W
R5409	1-249-409-11	CARBON	220 5%	1/4W
R5410	1-249-401-11	CARBON	47 5%	1/4W

Note : The components identified by shading and marked ⚠ are critical for safety. Replace only with the part numbers specified in the parts list.

REF.NO.	PART.NO	DESCRIPTION	REMARK
R5411	1-249-401-11	CARBON 47 5%	1/4W
R5412	1-249-429-11	CARBON 10K 5%	1/4W
R5413	1-249-414-11	CARBON 560 5%	1/4W
R5414	1-249-432-11	CARBON 18K 5%	1/4W
R5415	1-260-316-51	CARBON 100 5%	1/2W
R5416	1-249-388-11	CARBON 3.9 5%	1/4W
R5417	1-249-432-11	CARBON 18K 5%	1/4W
R5418	1-249-414-11	CARBON 560 5%	1/4W
R5419	1-249-421-11	CARBON 2.2K 5%	1/4W
R5420	1-249-421-11	CARBON 2.2K 5%	1/4W
R5421	1-249-386-11	CARBON 2.7 5%	1/4W
R5422	1-249-405-11	CARBON 100 5%	1/4W
R5423	1-215-915-11	METAL OXIDE 470 5%	3W
R5425	1-535-303-00	LEAD, JUMPER (5.0MM)	
R5427	1-249-401-11	CARBON 47 5%	1/4W
R5428	1-249-413-11	CARBON 470 5%	1/4W
R5429	1-249-413-11	CARBON 470 5%	1/4W
R5430	1-249-417-11	CARBON 1K 5%	1/4W
R5432	1-249-415-11	CARBON 680 5%	1/4W
R5433	1-249-400-11	CARBON 39 5%	1/4W
R5434	1-249-395-11	CARBON 15 5%	1/4W

* A-1636-052-A G1 Board, Complete

4-202-373-01	SPRING, IC	
4-382-854-01	SCREW (M3X8), P, SW (+)	

< CAPACITOR >

C4600 ⚠	1-161-964-91	CERAMIC	0.0047UF		250V
C4601 ⚠	1-161-964-91	CERAMIC	0.0047UF		250V
C4602	1-165-685-11	ELECT(BLOCK)	82UF	20	450V
C4603	1-127-568-51	CERAMIC	4700PF	10%	2KV
C4604	1-126-964-11	ELECT	10UF	20.00%	50V
C4605	1-102-228-00	CERAMIC	470PF	10.00%	500V
C4606	1-162-318-11	CERAMIC	0.001UF	10.00%	500V
C4607	1-165-602-91	CERAMIC	220PF	10	2KV
C4608	1-126-967-11	ELECT	47UF	20.00%	50V
C4609	1-130-777-00	MYLAR	0.1UF	5.00%	100V
C4610	1-130-777-00	MYLAR	0.1UF	5.00%	100V
C4611	1-126-971-11	ELECT	470UF	20.00%	50V
C4612	1-136-165-00	FILM	0.1UF	5.00%	50V
C4615	1-136-165-00	FILM	0.1UF	5.00%	50V
C4616	1-104-665-11	ELECT	100UF	20.00%	25V
C4618	1-136-165-00	FILM	0.1UF	5.00%	50V
C4619	1-104-665-11	ELECT	100UF	20.00%	25V
C4621	1-136-165-00	FILM	0.1UF	5.00%	50V
C4622	1-104-665-11	ELECT	100UF	20.00%	25V
C4623	1-136-165-00	FILM	0.1UF	5.00%	50V
C4624	1-126-961-11	ELECT	2.2UF	20.00%	50V
C4625	1-115-766-51	ELECT	0.0022F	20.00%	16V
C4626	1-104-665-11	ELECT	100UF	20.00%	25V
C4627	1-136-165-00	FILM	0.1UF	5.00%	50V
C4628	1-115-766-51	ELECT	0.0022F	20.00%	16V
C4629	1-115-792-11	ELECT	0.0022F	20.00%	25V

< CONNECTOR >

CN4600 ⚠	1-580-843-11	PIN, CONNECTOR (POWER)
CN4601	*1-564-506-11	PLUG, CONNECTOR 3P
CN4602	1-764-333-11	PIN, CONNECTOR(PCB)(V TYPE)10P
CN4603	*1-564-511-11	PLUG, CONNECTOR 8P

< DIODE >

D4600	8-719-025-88	DIODE GBU4JL-6088
D4601	8-719-080-26	DIODE SARS01V0
D4602	8-719-075-11	DIODE AG01ZV0
D4603	8-719-075-11	DIODE AG01ZV0
D4604	8-719-075-11	DIODE AG01ZV0
D4605	8-719-075-11	DIODE AG01ZV0
D4606	8-719-072-17	DIODE BYW100-200RL
D4607	6-500-081-01	DIODE RK34-LF-C4
D4608	8-719-312-10	DIODE RU4AM-T3
D4609	6-500-082-01	DIODE RJ43-LF-T2
D4611	8-719-991-33	DIODE 1SS133T-77
D4612	8-719-063-70	DIODE D1NL20U

< FERRITE BEAD >

FB4602	1-410-396-41	FERRITE 0.45UH
FB4603	1-410-396-41	FERRITE 0.45UH
FB4604	1-535-465-11	LEAD, JUMPER (5.0MM)
FB4605	1-535-465-11	LEAD, JUMPER (5.0MM)
FB4606	1-535-465-11	LEAD, JUMPER (5.0MM)

< IC >

IC4600 ⚠	6-700-292-01	IC STR-L474-LF429
IC4601 ⚠	8-749-013-21	IC TLP721(D4-GR.T)
IC4602	6-700-293-01	IC SE-012N-LF4
IC4604	8-759-648-19	IC L7809CV/LSY

< COIL >

L4600	1-410-397-21	FERRITE 1.1UH
L4601	1-535-465-11	LEAD, JUMPER (5.0MM)
L4602	1-412-519-11	INDUCTOR 3.3UH
L4603	1-412-519-11	INDUCTOR 3.3UH
L4604	1-412-519-11	INDUCTOR 3.3UH

< PROTECTOR MODULE >

PS4601	1-535-465-11	LEAD, JUMPER (5.0MM)
PS4602	1-535-465-11	LEAD, JUMPER (5.0MM)
PS4603 ⚠	1-801-550-21	PROTECTOR, MODULE 2.5A MP250
PS4604 ⚠	1-801-550-21	PROTECTOR, MODULE 2.5A MP250
PS4605 ⚠	1-801-549-21	PROTECTOR, MODULE 4.0A MP250

Note : The components identified by shading and marked ⚠ are critical for safety. Replace only with the part numbers specified in the parts list.

REF.NO.		PART.NO	DESCRIPTION			REMARK
			< TRANSISTOR >			
Q4600		8-729-029-56	TRANSISTOR DTA144ESA			
Q4601		8-729-119-78	TRANSISTOR 2SC2785-HFE			
			< RESISTOR >			
R4600	⚠	1-217-155-00	METAL	1	10%	2W
R4601	⚠	1-260-127-11	CARBON	220K	5%	1/2W
R4602	⚠	1-217-418-00	FUSIBLE	0.47	10%	1/2W
R4603		1-260-133-11	CARBON	680K	5%	1/2W
R4604		1-215-884-11	METAL OXIDE	47	5%	2W
R4605		1-249-401-11	CARBON	47	5%	1/4W
R4607		1-249-421-11	CARBON	2.2K	5%	1/4W
R4608	⚠	1-260-128-91	CARBON	270K	5%	1/2W
R4609		1-249-419-11	CARBON	1.5K	5%	1/4W
R4610		1-249-403-11	CARBON	68	5%	1/4W
R4611		1-249-418-11	CARBON	1.2K	5%	1/4W
R4612		1-249-419-11	CARBON	1.5K	5%	1/4W
R4613		1-259-880-11	CARBON	2.2M	5%	1/4W
R4614		1-249-417-11	CARBON	1K	5%	1/4W
R4615		1-249-425-11	CARBON	4.7K	5%	1/4W
R4616		1-216-366-00	METAL OXIDE	0.56	5%	2W
R4617		1-249-415-11	CARBON	680	5%	1/4W
R4618		1-249-420-11	CARBON	1.8K	5%	1/4W
			< RELAY >			
RY4601	⚠	1-755-389-11	RELAY (AC POWER)			
			< TRANSFORMER >			
T4601	⚠	1-437-445-11	TRANSFORMER, CONVERTER (SRT)			

REF.NO.		PART.NO	DESCRIPTION	REMARK
MISCELLANEOUS				
	⚠	1-571-433-21	SWITCH, PUSH (AC POWER)	
		1-424-855-11	COIL, CHOKE 29MMH	
	⚠	1-792-592-11	CORD, PLUG WITH POWER	
		8-598-529-10	FRONTEND BTF-EU611	
		8-598-585-00	FRONTEND BTD-DU604	
	⚠	1-453-444-21	TRANSFORMER ASSY, FLYBACK (NX-6020//Z2B4)	
		1-542-437-11	SPEAKER (2CM)	
		1-825-177-11	LOUDSPEAKER (4.2x24CM)	
		1-825-213-11	LOUDSPEAKER (10CM)	
	⚠	8-451-507-32	DEFLECTION YOKE (Y36RVC2-M3)	
		1-452-896-11	COIL, NA ROTATION (RT200)	
	⚠	8-453-007-31	NECK ASSY, (NA324-M3)	
	⚠	1-428-963-11	DEGAUSSING COIL	
	⚠	1-251-946-11	CAP ASSY, HIGH-VOLTAGE	
	⚠	8-735-061-05	PICTURE TUBE (W86LPH010X)	
		1-452-094-00	MAGNET, ROTATABLE DISK; 15MM	
		1-452-032-00	MAGNET, DISK; 10MM	
ACCESSORIES AND PACKAGING MATERIALS				
		*4-087-938-01	JOINT	
		*4-088-711-01	CUSHION, UPPER	
		*4-088-712-01	CUSHION, LOWER	
		*4-088-713-01	INDIVIDUAL CARTON	
		*4-088-714-01	TRAY	
		4-090-229-61	INSTRUCTION MANUAL (ENGLISH)	
REMOTE COMMANDER				
		1-477-551-11	REMOTE COMMANDER (RM-939)	

TRACE

A new TV Repair Assistance Tool that combines ease of use and powerful PC software tools to allow you to save valuable time during many TV repairs.

The TRACE interface connects to the PC's serial port. It provides connection to the TV's I²C bus and can be provided with an InfraRed transmitter (optional).

The interface is powered by a standard 9 V PP3 battery for portable use, and can also be powered by an external 9V/25mA DC power supply.

The TRACE software that is supplied with the interface allows you to:

- Read, restore and compare NVM contents via the I²C bus
- Acknowledge check of all I²C devices in the TV set
- Read Error Codes (emulation of the Error Reader tool)

With the optional IR Add-on kit, the following features can be added:

- Remote Commander emulation
- User programmable Functional Check through Infrared
- Fast and documented Test Mode setting of all Sony TV chassis

Additional features such as Adjustments and Troubleshooting are available in chassis-dependent software modules. Please contact your local Sony Service organisation for the latest information.

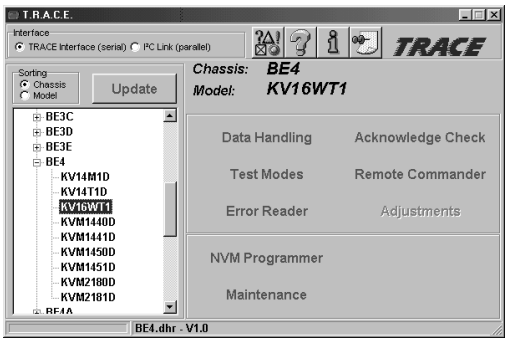

Note: For workshops already using the existing I²C Link parallel port interface (9-948-320-30), this software can be used as well, replacing the TV Data Handling software (9-948-340-50), but Error Reader and IR functions can only be accessed with the TRACE interface.

Partnumbers:

TRACE Starter Kit (TRACE interface + software):	9-948-320-70
TRACE Software (for users of the I²C Link interface):	9-948-340-80
TRACE IR Add-on (IR interface + Remote Commander software):	9-948-320-80

PC requirements: IBM-compatible PC with operating system Windows95, Windows98, or WindowsNT*.

* WindowsNT only supported with TRACE interface

9-927-427-01

Sony Corporation
Sony UK
Service Promotions Dept.

English
02IP7100-1
Printed in U.K.
© 2002.9